DEL NORTE SOLID WASTE MANAGEMENT AUTHORITY
CITY OF CRESCENT CITY
COUNTY OF DEL NORTE
STATE OF CALIFORNIA

Board of Supervisors Chambers
Flynn Center 981 H Street
Crescent City, CA

Special Session **Tuesday November 14, 2017** **3:30 PM**

++

The Solid Waste Management Authority of the City of Crescent City and the County of Del Norte, State of California, is now meeting in Special Session. Only those items that indicate a specific time will be heard at the assigned time. All items may be taken out of sequence to accommodate public and staff availability.

++

All documents referred to in this agenda are available at the Office of the Del Norte Solid Waste Management Authority at 1700 State Street in Crescent City, between the hours of 8 A.M. and 5 P.M. Monday through Friday OR online at www.recycledelnorte.ca.gov
For more information call 465-1100 or email dnswma@recycledelnorte.ca.gov

3:30 PM **CALL MEETING TO ORDER / ROLL CALL**
PLEDGE OF ALLEGIANCE

PUBLIC COMMENTS:
3:30 PM ANY MEMBER OF THE PUBLIC MAY ADDRESS THE SOLID WASTE MANAGEMENT AUTHORITY ON ANY MATTER ON OR OFF THE AGENDA. After receiving recognition from the Chair, please give your name and address for the record. Comments will be limited to three minutes.

OPEN SESSION ITEMS:

1. CONSENT AGENDA

1.1 Approve minutes, Regular Session, Tuesday October 17, 2017. **
1.2 Approve payment of a claim to Hemmingsen Construction for Invoice #008159 in the amount of $52,487.50 **
1.3 Approve payment of a claim to Hemmingsen Construction for Invoice #008160 in the amount of $14,072.12 **
1.4 Approve budget transfer for FY 17/18 in the amount of $220,720.00 **

END CONSENT AGENDA

2. TREASURER'S REPORTS

Agenda items 2.1 through 2.5 are provided for information only

2.1 Treasurer/Controller Reports for September 2017 **
2.2 Claims approved by Director & Treasurer for October 2017 **

2.3 Monthly Cash and Charge Reports for October 2017**
2.4 Earned Revenue Comparisons between FY16/17 and FY17/18 **

DISCUSSION/ACTION ITEMS

3. LANDFILL POSTCLOSURE

3.1 Discussion and possible action regarding Change Order 1 in the amount of $14,072.12 for repair and replacement of drainage structures. **

4. COLLECTIONS FRANCHISE

4.1 Discussion and possible ratification of the Processing Agreement between Recology Del Norte and Recology Humboldt for processing of Recology Del Norte's recyclables. **

5. TRANSFER STATION

5.1 Discussion and possible acceptance of the contract proposed by American Restore for Transfer Station Floor and Ramp Repair Project for an amount not to exceed $165,030.03. **

6. OTHER GENERAL SOLID WASTE AUTHORITY MATTERS

6.1 Discussion and possible action regarding approving travel expense for the Authority Director's to attend meetings of the Environmental Services Joint Powers Authority of the Regional Council of Rural Counties. **

6.2 Discussion and possible action regarding cancelling the regular Authority meeting of November 21st, 2017.

7. CLOSED SESSION ITEMS:

7.1 PUBLIC EMPLOYEE PERFORMANCE EVALUATION
(Gov't code 54957) Title: Director

8. ADJOURNMENT

Adjourn to the next Regular Meeting of the Del Norte Solid Waste Management Authority scheduled for 3:30 P.M. Tuesday December 19, 2017 at the Del Norte County Board of Supervisors' Chambers, 981 H Street, Suite 100 in Crescent City.

**** Asterisks next to Agenda Item indicates an associated attachment**

DEL NORTE SOLID WASTE MANAGEMENT AUTHORITY
CITY OF CRESCENT CITY
COUNTY OF DEL NORTE
STATE OF CALIFORNIA
MINUTES

Regular Session, Tuesday October, 17th, 2017, 3:30 P.M.

PRESENT:

Commissioner Chris Howard, Vice Chair
Commissioner Blake Inscore, Chair
Commissioner Jason Greenough
Commissioner Lori Cowan
Commissioner Eli Naffah
Director Tedd Ward
Legal Counsel Martha Rice
Authority Clerk Kyra Seymour
Authority Treasurer/Controller Rich Taylor

ALSO PRESENT:

Joel Wallen, Hambro Waste Solutions Group
Dave Slagle, Interim CEO. Hambro/ WSG
Jeremy Herber, Recology Del Norte
Katherine Brewer – Administrative Assistant – Solid Waste

3:30 P.M. CALL MEETING TO ORDER:

Chair Inscore called the meeting to order in regular session at 3:30 P.M. Roll was taken with all the commissioners present as indicated.

PLEDGE OF ALLEGIANCE:

The pledge of Allegiance was led by Commissioner Cowan.

PUBLIC COMMENTS:

At 3:31 P.M. Chair Inscore called for public comments, seeing none the Chair then closed the public comment period.

Director Ward requested two items to be added to the agenda as urgency items. Both items arose subsequent to the posting of the agenda on 13 October 2017. The first item was an invoice that was not received before the agenda was published, but payment of this claim requires Board approval. Regarding the second item, it was not

known until October 17th that negotiations for the processing agreement would not be complete.

Both items require action before the next meeting as for the first approval of payment is needed to avoid late penalties. And for the second without the adoption of change order 14 extending the temporary waiver, Recology would be in violation of contract provisions requiring that they have a processing agreement.

Agenda items to add are as follows:

1. *Discussion and possible action regarding payment of a claim in an amount not to exceed $28,956.45 for invoice 1002042177 or substitute invoice for services associated with the household hazardous waste event on September 16th, 2017*

2. *Discussion and possible action regarding Collections change order 14, extending the temporary waiver of requirements for a recycling processor for another 30 days.*

On a motion by Commissioner Howard and seconded by Commissioner Cowan and unanimously carried on a polled vote the Del Norte Solid Waste authority approved the addition of these items 1 and 2 as described above, into the agenda.

OPEN SESSION ITEMS:

1. CONSENT AGENDA

1.1 Approve minutes, Regular Session, Tuesday September 19, 2017.
1.2 Approve payment of a claim to NorthCoast Laboratories for analysis of water samples, paying invoices 135486, 135454, 135670, and 135815 in the amount of $11,436.00
1.3 Approve budget transfer for FY 17/18 in the amount of $25,300.00 **022101**

END CONSENT AGENDA

On a motion by Commissioner Greenough and seconded by Commissioner Howard and unanimously carried on a polled vote the Del Norte Solid Waste authority approved and adopted the consent agenda, consisting of items 1.1 to 1.3

2. DIRECTOR'S & TREASURER'S REPORTS
Agenda items 2.1 through 2.5 are provided for information only

2.1 Director's State of the Agency Report for 2017 **231501**
2.2 Treasurer/Controller Reports for July and August 2017 **201803**

2.3 Claims approved by Director for September 2017 **031202**
2.4 Monthly Cash and Charge Reports for September 2017 **201803**
2.5 Earned Revenue Comparisons between FY16/17 and FY17/18 **201803**

2.6 **Added Item**, Discussion and possible action regarding payment of a claim in an amount not to exceed $28,956.45 for invoice 1002042177 or substitute invoice for services associated with the household hazardous waste event on September 16th, 2017

On a motion by Commissioner Howard and seconded by Commissioner Greenough and unanimously carried on a polled vote the Del Norte Solid Waste authority approved Item 2.6 to the amount stated $28,956.45 with the caveat that if any part of the invoice is incorrect, that staff are not to pay that incorrect amount.

DISCUSSION/ACTION ITEMS:

3. LANDFILL POSTCLOSURE

3.1 Status report regarding the Storm-related Landfill Repair Project. **120110**

Director Ward presented a slide show to report additional fire related damage. Staff intend to confer with County staff to expeditiously complete the additional fire-related repairs needed. Staff will provide further updates at the next meeting. The Board took no action.

4. COLLECTIONS FRANCHISE

4.1 Discussion and possible action regarding a Processing Agreement between Recology Humboldt and Recology Del Norte regarding processing of recyclables collected by Recology Del Norte. **180516, 180510**

Director Ward explained that negotiations regarding final details of the Processing Agreement between Recology Del Norte and Recology Eel River had not been resolved prior to this meeting.

4.2 **Added Item** Discussion and possible action regarding Collections Change Order 14, extending the temporary waiver of requirements for a recycling processor for another 30 days. **180510**

On a motion by Commissioner Naffah and seconded by Commissioner Cowan and unanimously carried on a polled vote the Del Norte Solid Waste authority approved and adopted Collections Change Order 14, extending the temporary waiver of requirements for a recycling processor for another 30 days.

5. TRANSFER STATION

5.1 Discussion and possible action regarding Invitation to Bid for Transfer Station Floor and Ramp Repair Project. **200601**

Director Ward provided a status report regarding Invitation to Bid for Transfer Station Floor and Ramp Repair Project, explaining that staff anticipate receiving bids on 01 November 2017, and that the Board would have the opportunity to contract for these services at the November meeting.

6. OTHER GENERAL SOLID WASTE AUTHORITY MATTERS

6.1 Discussion and possible action regarding amending procedures related to commercial charge accounts, closing accounts which have been placed on 'Hold' three times. **040501**

On a motion by Commissioner Howard and seconded by Commissioner Greenough and unanimously carried on a polled vote the Del Norte Solid Waste authority approved and adopted amending procedures related to commercial charge accounts, closing accounts which have been placed on 'Hold' three times.

6.2 Discussion and possible action regarding a Draft Request for Proposals for Litter Cleanup services. **191202 G1**

On a motion by Commissioner Greenough and seconded by Commissioner Howard and unanimously carried on a polled vote the Del Norte Solid Waste authority approved and adopted a Draft Request for Proposals for Litter Cleanup services.

6.3 Discussion and possible action regarding scheduling a Special Meeting for November 7th, 2017.

The Board chose to forgo a Special Meeting for November 7th, 2017. and scheduled a **Special Meeting on November 14th 2017. At 2:30 P.M.** also the regular meeting on November 21st is cancelled.

6.4 Discussion and possible action regarding the status of the Authority Work Plan for FY 2017 / 2018. **231501**

Director Ward presented the updated Work Plan for FY 2017/2018.

7. CLOSED SESSION ITEMS:

7.1 PUBLIC EMPLOYEE PERFORMANCE EVALUATION
(Gov't code 54957) Title: Director

The Chairman recessed the regular meeting of the Del Norte Solid Waste Management Authority and convened in closed session at 4:30 P.M. and the meeting reconvened at 4:33 P.M. Counsel reported that no action was taken during closed session

8. ADJOURNMENT

Adjourn to the next Special Meeting of the Del Norte Solid Waste Management Authority scheduled for 3:30 P.M. Tuesday November 7th, 2017 at the Del Norte County Board of Supervisors' Chambers, 981 H Street, Suite 100 in Crescent City.

There being no further business to come before the authority, the Chair adjourned meeting at 4:33 P.M., until the regular meeting on November 14th 2017.

_____ Date / /
Blake Inscore, Chair
Del Norte Solid Waste Management Authority

ATTEST:

_____ Date / /
Eli Naffah, Secretary
Del Norte Solid Waste Management Authority

Submitted:

_____ Date / /
Kyra Seymour, Clerk
Del Norte Solid Waste Management Authority

Vendor Hemmingsen Contracting Company, Inc.
P.O. Box 215

Crescent City CA 95531

Vendor ID: 10425

☐ *PBSP Expense*
☐ *Change of Address*

Claim ID: 8042

AUDITOR COPY

Special Warrant Routing

Fund	Dept	Line	Proj	Amount	Description
422	421	20239	001	$52,487.50	INV 008159 Landfill Storm Damage Rep, 1st payme

Total Claim: $52,487.50

I HEREBY CERTIFY THE ARTICLES OR SERVICES DESCRIBED ON THE ATTACHED INVOICES WERE NECESSARY FOR USE BY THE DEPARTMENT AND HAVE BEEN RECEIVED, AND THAT NO PRIOR CLAIM FOR SAME HAS BEEN

1.2

X
Signature of Department Head/Authorized Deputy

11/9/2017
Claim Date

HEMMINGSEN CONTRACTING COMPANY, INC.

P.O. Box 215
CRESCENT CITY, CALIFORNIA 95531
Phone (707) 464-5225 **FAX (707) 464-3659**

№ 008159

CUSTOMER'S ORDER NO.	PHONE	DATE 11-8-17

NAME: Del Norte Solid Waste management authority

ADDRESS: 10425 / 20239-001

LOCATION: CC Landfill Storm Damage Repair

QTY.	DESCRIPTION	PRICE	AMOUNT
	Progress pay #1		
	Through Nov. 10, 2017		
	Contract completed to date		55,250.00
	Less 5% Retention		(2,762.50)
		TAX	
		TOTAL	52,487.50

NOTICE: We are delivering materials and supplies for use upon the above-described premises upon the order of the below signed, his principal or agent; in accordance with law, a lien may be claimed for all materials and supplies delivered after a date which is ten days before this notice is so delivered or mailed to you; payment by the owner or lender to the contractor or owner does not remove our right to claim a lien against such property unless we are in fact paid. No further notice of this or any subsequent delivery is necessary.

PAYMENT DUE ON DELIVERY. Account Past Due on the 10th of the month first following month of delivery. **FINANCE CHARGE** on all Past-due accounts determined by applying monthly periodic rate of 2% per month (**24% ANNUAL PERCENTAGE RATE**) from delivery date.

Buyer hereby releases and discharges seller for all damage to underground utilities (water, electrical and gas lines, septic tanks, etc.) when delivery is made inside the curb lines and on all private roads and drives at the request or direction of buyer, his agent or representative.

PROPOSITION 65 NOTICE: The following applies to California only: Asphalt products contain chemicals known to the State Of California to cause cancer, birth defects or other reproductive harm.

ASBESTOS AIRBORNE TOXIC CONTROL MEASURES:

WARNING: This material may contain asbestos. It is unlawful to use this material for surfacing or any application in which it would remain exposed and subject to possible disturbances. Extreme care should be taken when handling this material to minimize the generation of dust. Purchaser represents and warrants that the Materials will be used for "non-surfacing applications" only, as defined in California Code of Regulations, Title 17, 93106, and agrees to indemnify, defend and hold harmless Seller from any and all claims, suits, actions, legal proceedings, damages, liabilities, interest, actual attorneys' fees, costs and expenses of whatever kind or nature arising under or as a result of Purchaser's failure to use the Materials as represented and warranted herein, or in a manner that is inconsistent with the specifications set forth herein.

RECEIVED BY _____

( ) General Contractor
( ) Sub-Contractor
( ) Owner

Del Norte Solid Waste Authority
CC Landfill Storm Damage Repair - 2017

Hemmingsen Contracting Co., Inc.

Progress Pay Estimate

Todays Date: November 8, 2017

Pay Estimate No.: **1**

Pay Period Ending Date: **November 10, 2017**

Item #	Description	Unit	Qty	Unit Cost	Total Cost	Qty Complete To Date	Total Cost To Date	Previous Qty Completed	Previous Total Cost	Complete This Period	Total Earned This Period
A1-1	Erosion Repair	Cy	70	80.00	5,600.00	70	5,600.00			70	5,600.00
A1-2	Repair Berms - Place Half Pipe	LF	92	50.00	4,600.00		0.00			-	0.00
A1-3	Underdrain Repair	LS	1	1,000.00	1,000.00	100%	1,000.00			100%	1,000.00
A1-4	Hauling Soils	CY	70	10.00	700.00		0.00			-	0.00
A2-1	Erosion Repair	Cy	70	80.00	5,600.00		0.00			-	0.00
A2-2	Repair Berms - Place Half Pipe	LF	80	50.00	4,000.00		0.00			-	0.00
A2-3	Hauling Soils	CY	70	10.00	700.00		0.00			-	0.00
A3-1	Erosion Repair	Cy	100	80.00	8,000.00	100	8,000.00			100	8,000.00
A3-2	4" Soil Placement	Cy	190	80.00	15,200.00	190	15,200.00			190	15,200.00
A3-3	Repair Berms - Place Half Pipe	LF	498	50.00	24,900.00		0.00			-	0.00
A3-4	Drain Inlet	EA	1	2,500.00	2,500.00	1	2,500.00			1	2,500.00
A3-5	Place 12" HDPE pipe	LF	18	200.00	3,600.00	18	3,600.00			18	3,600.00
A3-6	Eroded Channel Repair	LF	430	45.00	19,350.00	430	19,350.00			430	19,350.00
A3-7	Hauling Soils	Cy	190	10.00	1,900.00		0.00			-	0.00
	TOTAL ORIGINAL CONTRACT				97,650.00	1	$ 55,250.00	0.00%	0.00	1	$ 55,250.00
	CHANGE ORDERS										
CO 1	Erosion Repair	Cy	0	80.00	0.00		0.00			-	0.00
	TOTAL OF CHANGE ORDERS				**0.00**	#DIV/0!	**0.00**	#DIV/0!		#DIV/0!	**0.00**
	TOTAL OF ORIGINAL CONTRACT & C/O'S				**97,650.00**	**1**	**$ 55,250.00**	**0.00%**	**0.00**	**1**	**$ 55,250.00**
	Less 5% Retention						$ (2,762.50)		$ -		$ (2,762.50)
	Balance Due This Estimate						**$ 52,487.50**				**$ 52,487.50**

Vendor Hemmingsen Contracting Company, Inc.
P.O. Box 215

Crescent City CA 95531

Vendor ID: 10425

☐ *PBSP Expense*
☐ *Change of Address*

Claim ID: 8041

AUDITOR COPY

Special Warrant Routing

Fund	Dept	Line	Proj	Amount	Description
422	421	20239	001	$14,072.12	INV 008160 Repair of Landfill Fire Damage

Total Claim: $14,072.12

I HEREBY CERTIFY THE ARTICLES OR SERVICES DESCRIBED ON THE ATTACHED INVOICES WERE NECESSARY FOR USE BY THE DEPARTMENT AND HAVE BEEN RECEIVED, AND THAT NO PRIOR CLAIM FOR SAME HAS BEEN

X

Signature of Department Head/Authorized Deputy

11/9/2017
Claim Date

13

HEMMINGSEN CONTRACTING COMPANY, INC.

P.O. Box 215
CRESCENT CITY, CALIFORNIA 95531
Phone (707) 464-5225 FAX (707) 464-3659

№ 008160

CUSTOMER'S ORDER NO.	PHONE	DATE 10-27-2017

NAME Del Norte Solid Waste Management Authority

ADDRESS

10-25
20239-001

LOCATION CC LandFill Fire Damage

QTY.	DESCRIPTION	PRICE	AMOUNT
	Force Account repair of piping damaged by fire		14,072 12
		TAX	
		TOTAL	14,072 12

NOTICE: We are delivering materials and supplies for use upon the above-described premises upon the order of the below signed, his principal or agent; in accordance with law, a lien may be claimed for all materials and supplies delivered after a date which is ten days before this notice is so delivered or mailed to you; payment by the owner or lender to the contractor or owner does not remove our right to claim a lien against such property unless we are in fact paid. No further notice of this or any subsequent delivery is necessary.

PAYMENT DUE ON DELIVERY. Account Past Due on the 10th of the month first following month of delivery. **FINANCE CHARGE** on all Past-due accounts determined by applying monthly periodic rate of 2% per month (**24% ANNUAL PERCENTAGE RATE**) from delivery date.

Buyer hereby releases and discharges seller for all damage to underground utilities (water, electrical and gas lines, septic tanks, etc.) when delivery is made inside the curb lines and on all private roads and drives at the request or direction of buyer, his agent or representative.

PROPOSITION 65 NOTICE: The following applies to California only: Asphalt products contain chemicals known to the State Of California to cause cancer, birth defects or other reproductive harm.

ASBESTOS AIRBORNE TOXIC CONTROL MEASURES:

WARNING: This material may contain asbestos. It is unlawful to use this material for surfacing or any application in which it would remain exposed and subject to possible disturbances. Extreme care should be taken when handling this material to minimize the generation of dust. Purchaser represents and warrants that the Materials will be used for "non-surfacing applications" only, as defined in California Code of Regulations, Title 17, 93106, and agrees to indemnify, defend and hold harmless Seller from any and all claims, suits, actions, legal proceedings, damages, liabilities, interest, actual attorneys' fees, costs and expenses of whatever kind or nature arising under or as a result of Purchaser's failure to use the Materials as represented and warranted herein, or in a manner that is inconsistent with the specifications set forth herein.

RECEIVED BY _____

( ) General Contractor
( ) Sub-Contractor
( ) Owner

Hemmingsen Contracting Co., Inc.

To: **Del Norte Solid Waste Authority**
Storm Damage Repair

Date: October 27, 2017 **Friday**

Force Account Repair of piping damaged by Fire

Summary for work performed between October 25th and October 27th, 2017

Date: Weekly Summary - 10-25-17 to 10-27-17

Wednesday	10/25/2017	$	8,464.58
Thursday	10/26/2017	$	3,245.14
Friday	10/27/2017	$	2,362.39
Total Due		$	**14,072.12**

Del Norte County Budget Transfer Request FY 17/18

Department Name	Fund	Dept.	Line Item	Description	Budget Transfer Amount(s) Reduce Expenditures or Increase Revenue	Budget Transfer Amount(s) Increase Expenditures or Reduce Revenue
Solid Waste	422	421	30500	Department Allotment	$ 216,844	
Solid Waste	422	421	20180	Maintenance - Structures/Improvements + TS Maintenance		$ 165,031
Solid Waste	422	421	20239-01	Post-Closure Maintenance		$ 51,813
Solid Waste	422	421	20285-062	Special Dept. Expense - Oil Grant 15/16		$ 876
Solid Waste	422	421	90650-062	Oil Grant 15/16	$ 876	
Solid Waste	422	421	20290	Travel		$ 2,500
Solid Waste	422	421	20275	Small Tools		$ 500
Solid Waste	422	421	91004	Authority Service Fees	$ 3,000	
				Total Amounts	$ 220,720	$ 220,720

Department complete and send to Auitor's Office for transfer number before sending to

Department Justification - Include cover letter that addresses the following: 1) Reason for request; 2) Why sufficient balances exist to finance transfer; 3) Why request

Department Head Signature

Date

Auditor's Office: Sufficient balances exist per above
(Under $100 Auditor's Office approves)

Deputy Auditor-Controller

Date

TR No. _____ Budget Revision No. _____

_____Includes Revenue Appropriation _____Requires 4/5ths Vote

County AdministrativeOfficer:
(Under $1000 - CAO approves)

Recommendation:

Approve _____
Deny _____
Submit for Board approval _____

County Administrative Officer

Date

Passed by Board of Commissioners of the Del Norte Solid Waste Management Authority on 14 November 2017.

Ayes:
Noes:
Absent:

Attest: Clerk of the Board

By: _____
Kyra Seymour

Blake Inscore, Chair
Del Norte Solid Waste Management Authority

4.1

Solid Waste
Balance Sheet
September 30, 2017

Unaudited

ASSETS

422 010 00000	Cash Solid Waste	1,213,692.92
422 010 00300	Imprest Cash	3,500.00
422 010 00500	I Bank Loan Deposit Held by County	198,177.17
422 010 01100	Accounts Receivable	3,047.75
422 010 03200	Land	493,000.00
422 010 03300	Transfer Station	3,266,990.64
422 010 03400	Equipment	158,443.55
422 010 03410	Buildings & Improvements	141,638.89
422 010 03440	Accum Depr Equipment	(157,814.00)
422 010 03450	Accum Depr Bldg & Improv	(113,204.00)
422 010 03460	Accum Depr Transfer Station	(918,877.00)
	Total Assets	4,288,595.92

LIABILITIES AND FUND EQUITY

422 010 05210	Sublease Payable	2,727,290.50
422 010 05300	Compensated Absences Payable	45,281.00
422 010 05500	Post Closure Liability	2,061,342.00
422 010 05600	Net OPEB Obligation	273,578.00
422 010 07100	Fund Balance	(1,597,228.31)
422 010 09600	Investment in Capital Assets net of related debt	578,198.00
	Revenue	749,100.65
	Expenditure	(548,965.92)
	Total Liabilities and Fund Equity	4,288,595.92

2.1

Del Norte Solid Waste Management Authority
A/R Aging Summary
As of November 6, 2017

	Current	1 - 30	31 - 60	61 - 90	> 90	TOTAL
Affordable Home & Rental Rep.	140.80	0.00	0.00	0.00	0.00	140.80
Agricultural Commission(solid waste only)	74.26	0.00	0.00	0.00	0.00	74.26
Alexandre EcoDairy Farms	0.00	586.74	0.00	0.00	0.00	586.74
AWI Management Corp	49.15	41.61	0.00	0.00	0.00	90.76
Babich Construction	7.50	0.00	0.00	0.00	0.00	7.50
Bart Kast Builders	362.97	0.00	0.00	0.00	0.00	362.97
Bayside Excavation	0.00	0.00	0.00	0.00	0.00	0.00
Benner Mini Storage	159.90	0.00	0.00	0.00	0.00	159.90
Borges Dairy	115.83	203.45	0.00	0.00	0.00	319.28
Brown, Hector	868.76	35.40	0.00	0.00	0.00	904.16
Cal-Ore LIFE FLIGHT	31.19	3.47	0.00	0.00	0.00	34.66
Cal-Trans	251.12	51.98	0.00	0.00	0.00	303.10
California Auto Image	259.88	0.00	0.00	0.00	0.00	259.88
California Construction Co.	10.40	17.06	0.00	0.00	0.00	27.46
California Dept. Parks & Rec.	807.21	1,688.39	0.00	0.00	0.00	2,495.60
Castlerock Countertop's	38.61	0.00	0.00	0.00	0.00	38.61
Cetnar Construction Inc.	17.82	0.00	13.37	0.00	0.00	31.19
City of Crescent City.	98.01	109.79	0.00	0.00	0.00	207.80
Cornerstone Assembly of God	277.13	0.01	0.00	0.00	0.00	277.14
Crescent Ace Hardware.	865.79	0.00	0.00	0.00	0.00	865.79
Crescent City KOA	344.29	0.00	0.00	0.00	0.00	344.29
Crescent Senior Estates	468.73	0.00	0.00	0.00	0.00	468.73
Del Norte Ambulance	35.64	0.00	0.00	0.00	0.00	35.64
Del Norte Health Care District	75.00	0.00	0.00	0.00	0.00	75.00
Del Norte Office Supply.	15.00	0.00	0.00	0.00	0.00	15.00
Del Norte Realty	7.50	226.11	0.00	0.00	0.00	233.61
Del Norte Roofing	0.00	377.14	0.00	0.00	0.00	377.14
DN Unified School District	932.31	0.00	0.00	0.00	0.00	932.31
Driftwood Apartments LLC	86.14	0.00	0.00	0.00	0.00	86.14
Elk Valley Casino	63.86	22.28	0.00	0.00	0.00	86.14
Elk Valley Rancheria	71.59	0.00	0.00	0.00	0.00	71.59
Elk Valley Storage	22.28	0.00	0.00	0.00	0.00	22.28
G. H. Outreach	128.40	0.00	0.00	0.00	0.00	128.40
Gasquet Mobile Home Park	45.50	0.00	0.00	0.00	0.00	45.50
GR Construction	59.40	0.00	0.00	0.00	0.00	59.40
Green Scapes	371.08	239.41	0.00	0.00	0.00	610.49
Griffin's Furniture Outlet	142.68	0.00	0.00	0.00	0.00	142.68
Hambro/Waste Solutions Group	20.11	0.00	0.00	0.00	0.00	20.11
Hank's Hauling	432.35	0.00	0.00	0.00	0.00	432.35
Hartley Construction	38.04	0.00	0.00	0.00	0.00	38.04
HASP / Jordan Recovery Centers	86.14	98.94	0.00	0.00	0.00	185.08
Hemmingsen Contracting Company	1,655.78	0.00	0.00	0.00	0.00	1,655.78
Hiouchi Community Fellowship	15.00	0.00	0.00	0.00	0.00	15.00
Humboldt Moving & Storage	50.49	0.00	0.00	0.00	0.00	50.49
Investment Realty	164.93	0.00	0.00	0.00	0.00	164.93
Kays Yard Service	72.70	0.00	0.00	0.00	0.00	72.70
Kirkland's Lawn & Yard Service	1,007.86	0.00	0.00	0.00	0.00	1,007.86
Kraft, Tom & Patti	144.05	2.94	0.00	0.00	0.00	146.99
Lara-Edelman Accounting Svc.	238.77	0.00	0.00	0.00	0.00	238.77
Larson Services	142.24	0.00	0.00	0.00	0.00	142.24
LNL Design and Construction	65.34	0.00	0.00	0.00	0.00	65.34
Madrone Court	488.53	553.04	0.00	0.00	0.00	1,041.57
Malloroy Construction	7.50	51.98	0.00	0.00	0.00	59.48
Mastaloudis Homes Inc.	491.08	0.00	0.00	0.00	0.00	491.08
McMurray & Sons, Inc.	2,793.62	983.07	0.00	0.00	0.00	3,776.69
Miller Construction	19.31	0.00	0.00	0.00	0.00	19.31
Mountain Power Tree Co	14.85	0.00	0.00	0.00	0.00	14.85
Mow Blow and Go	75.35	0.00	0.00	0.00	0.00	75.35
Murray Construction	351.97	0.00	0.00	0.00	0.00	351.97
New Dawn Support Services	343.74	0.00	0.00	0.00	0.00	343.74
North Coast Properties	17.90	0.00	0.00	0.00	0.00	17.90
North Woods Realty	301.34	0.00	0.00	0.00	0.00	301.34
Northcoast Marine Mammal Ctr.	16.34	0.00	0.00	0.00	0.00	16.34
Northridge Electric	207.91	0.00	0.00	0.00	0.00	207.91
Orcutt's Landscaping/Lawn Care	34.49	0.00	0.00	0.00	0.00	34.49
Pacific Ocean Park	149.99	572.01	0.00	0.00	0.00	722.00

Del Norte Solid Waste Management Authority
A/R Aging Summary
As of November 6, 2017

	Current	1 - 30	31 - 60	61 - 90	> 90	TOTAL
Pappas Dry Wall	220.01	0.00	0.00	0.00	0.00	220.01
Parkway Feed	90.59	0.00	0.00	0.00	0.00	90.59
Pebble Beach Apartments	106.93	147.62	121.65	0.00	0.00	376.20
Pelican Bay Roofing Co.	6.72	0.00	0.00	0.00	0.00	6.72
Plunkett's Family Painting	51.98	0.00	0.00	0.00	0.00	51.98
Ray's Mobile Home Service	806.37	158.01	0.00	0.00	0.00	964.38
Recology Del Norte (Franchise)	112,865.00	0.00	0.00	0.00	0.00	112,865.00
Recology Del Norte (Prison)	12,420.57	0.00	0.00	0.00	0.00	12,420.57
Red Sky Roofing	16,621.13	18,326.36	0.00	0.00	0.00	34,947.49
Redwood National Park	1,459.77	0.00	0.00	0.00	0.00	1,459.77
Reservation Ranch	350.47	170.78	0.00	0.00	0.00	521.25
Richterich & Jones Const	145.54	0.00	0.00	0.00	0.00	145.54
Rick Parker Construction	213.84	0.00	0.00	0.00	0.00	213.84
Ritchie Homes	213.82	0.00	0.00	0.00	0.00	213.82
Rogers, Luu T.	0.00	0.00	17.82	0.00	0.00	17.82
Ron Spitzner	395.02	0.00	0.00	0.00	0.00	395.02
Roy Rook Construction	89.10	114.35	0.00	0.00	0.00	203.45
Ruiz Construction	0.00	92.07	0.00	0.00	0.00	92.07
S.O.S. Construction	75.74	0.00	0.00	0.00	0.00	75.74
Schnacker's *COLLECTIONS*	2.32	266.74	102.47	0.00	463.34	834.87
Seawood Village	3,002.72	3,288.91	0.00	0.00	0.00	6,291.63
Smith River Fire Prot. Dist.	7.50	0.00	0.00	0.00	0.00	7.50
Sprint Courier Service	19.38	145.54	0.00	0.00	0.00	164.92
Stephen F White Gen.Cont. Inc.	54.80	0.00	0.00	0.00	0.00	54.80
Stone Roofing	7,090.38	0.00	0.00	0.00	0.00	7,090.38
Sutter Coast Hospital	37.13	0.00	0.00	0.00	0.00	37.13
Swanson, Ray C. Construction	74.25	0.00	0.00	0.00	0.00	74.25
Tab & Associates	149.68	0.00	0.00	0.00	0.00	149.68
Tim Haban Construction	11.88	0.00	0.00	0.00	0.00	11.88
Van Arsdale Construction	3,635.31	0.00	0.00	0.00	0.00	3,635.31
Van Nocker's Cleaning	7.50	0.00	0.00	0.00	0.00	7.50
Yurok Indian Housing Authority	21.21	0.00	0.00	0.00	0.00	21.21
Yurok Tribe	551.50	240.91	0.00	0.00	0.00	792.41
TOTAL	177,551.61	28,816.11	255.31	0.00	463.34	207,086.37

CLAIMS APPROVED BY THE DIRECTOR

Del Norte Solid Waste Management Authority

Claims for October 2017

Date Paid	Paid to:	Budget	Amt. Paid	Description	Claim #
10/3/2017	Taylor, Richard D.	20235	$ 400.00	Treasurer/Controller Services September 2017	7992
10/3/2017	Mission Linen Supply	20140	$ 30.86	INV 505814360 Linen service 09/26/17	7993
	Mission Linen Supply	20140	$ 30.86	INV 505720972 Linen service 09/12/17	
10/3/2017	Crescent Ace Hardware	20239-001	$ 8.59	INV 679530 NIPPLE GALV 1"X12"	7994
	Crescent Ace Hardware	20224	$ 37.61	INV 682393 AIR CIRCULTR FAN20"GRYWH	
	Crescent Ace Hardware	20224	$ 20.41	INV 682393 PICKUP TOOL 36"	
	Crescent Ace Hardware	20140	$ 12.88	INV 682393 DUCT TAPE 1.88"X60YD ACE, 2	
	Crescent Ace Hardware	20180	$ 10.31	INV 683340 RAKE SPRING BRACE 18"WD	
	Crescent Ace Hardware	20239-001	$ 38.49	INV 679530 CUT ROPE OR CHAIN, 20	
	Crescent Ace Hardware	20239-001	$ 3.11	INV 679530 NIPPLE GALV 1.25"X2.5"	
	Crescent Ace Hardware	20239-001	$ 13.96	INV 679530 COUPLE 2"X1.25" GALV	
	Crescent Ace Hardware	20239-001	$ 4.81	INV 679530 CLAMP 11/16 TO 1-1/2"SS, 3	
	Crescent Ace Hardware	20239-001	$ 0.73	INV 679530 THREAD SEAL TAPE1/2X260	
	Crescent Ace Hardware	20140	$ 2.55	INV 682393 TAPE ELECT3/4X60'VYL ACE, 3	
	Crescent Ace Hardware	20239-001	$ 8.59	INV 679530 COUPLE 1.25"X1" GALV	
	Crescent Ace Hardware	20239-001	$ 3.75	INV 680322 ELBOW GLV 1" 90 DEG EQL	
	Crescent Ace Hardware	20239-001	$ 13.96	INV 679530 COUPLE 2"X1.25" GALV	
	Crescent Ace Hardware	20239-001	$ 6.00	INV 679530 ADAPTR GALV 1" BARBXMPT, 2	
	Crescent Ace Hardware	20239-001	$ 8.59	INV 679530 COUPLE 1.25"X1" GALV	
	Crescent Ace Hardware	20239-001	$ 34.39	INV 679530 WRENCH PIPE 14" RIDGE	
	Crescent Ace Hardware	20239-001	$ 4.29	INV 679530 LEVER FLUSH PLSTC CHR	
	Crescent Ace Hardware	20239-001	$ 4.93	INV 679532 MOTOR OIL SAE30HD QT ACE	
	Crescent Ace Hardware	20239-001	$ 13.96	INV 679552 PIPE WRENCH 14" SG	
	Crescent Ace Hardware	20239-001	$ 2.36	INV 679552 COUPLING GLV 1" EQL	
	Crescent Ace Hardware	20239-001	$ (13.96)	CM 679696 PIPE WRENCH 14" SG	
	Crescent Ace Hardware	20239-001	$ 3.00	INV 679530 NIPPLE GALV 1.25"X2"	
10/4/2017	Butcher, Andrew	20231	$ 750.00	INV 2325 IT Services October 2017	7995
10/4/2017	Butcher, Andrew	20231	$ 150.00	INV 2331 Ubiquiti UAP, indoor dedicated wireless	7996
10/4/2017	Recology	20288	$ 256.34	BILL 05149844 900 Tenth St - City Yard	7997
10/4/2017	Recology	20288	$ 819.32	BILL 05149810 1001 Front St - Cultural Center	7998
10/4/2017	Recology	20283	$ 464.58	BILL 05149836 500 Cooper Ave - County Yard	7999
10/5/2017	California Product Stewardship Council	20200	$ 1,000.00	INV FY18-029-AF 2017-18 CPSC Associate Fees	8000
10/5/2017	U S Bank Corp P S	20224	$ 128.69	ORD 403069251 Brother DCP-L2520DW Laser Mul	8001
	U S Bank Corp P S	20224	$ 41.81	ORD 403069271 Brother TN630 Toner Cartridge, Bl	
	U S Bank Corp P S	20239-001	$ 38.38	ORD 48763993 1 Part D Alum coupling, 2	
	U S Bank Corp P S	20290	$ 210.96	CONF 131373 Paradise Point Resort	
	U S Bank Corp P S	20290-066	$ 179.68	CONF 131373 Paradise Point Resort	
	U S Bank Corp P S	20290-066	$ 16.80	CONF 1487183 Shared-Ride Van, Paradise Pt-SAN	
	U S Bank Corp P S	20180	$ 123.75	ORD W103670 6121 ProSeries Covered Padlock, 6	
	U S Bank Corp P S	20239-001	$ 189.03	ORD W772267327 Duromax 7 HP 2 in. Portable Uti	
10/5/2017	Del Norte Office Supply	20224	$ 7.85	ORD 523277 Avery Ready Index Customizable Tabl	8002
10/6/2017	Bi-Coastal Media	20240	$ 42.00	INV 4303-2, Hazardous Waste Event Ad KCRE 9/19	8003
	Bi-Coastal Media	20240	$ 42.00	INV 4303-2, Hazardous Waste Event Ad KCRE 9/14	
	Bi-Coastal Media	20240	$ 42.00	INV 4303-2, Hazardous Waste Event Ad KCRE 9/12	
	Bi-Coastal Media	20240	$ 42.00	INV 4303-2, Hazardous Waste Event Ad KCRE 9/8	
	Bi-Coastal Media	20240	$ 42.00	INV 4303-2, Hazardous Waste Event Ad KCRE 9/6	
	Bi-Coastal Media	20240	$ 42.00	INV 4303-2, Hazardous Waste Event Ad KCRE 9/4	
	Bi-Coastal Media	20240	$ 42.00	INV 4303-1 Hazardous Waste Event Ad KPOD 9/15	
	Bi-Coastal Media	20240	$ 42.00	INV 4303-1 Hazardous Waste Event Ad KPOD 9/13	
	Bi-Coastal Media	20240	$ 42.00	INV 4303-1 Hazardous Waste Event Ad KPOD 9/11	
	Bi-Coastal Media	20240-063	$ 42.00	INV 4303-1 Hazardous Waste Event Ad KPOD 9/9	
	Bi-Coastal Media	20240-063	$ 42.00	INV 4303-1 Hazardous Waste Event Ad KPOD 9/7	
	Bi-Coastal Media	20240-063	$ 42.00	INV 4303-1 Hazardous Waste Event Ad KPOD 9/5	
10/6/2017	North Coast Laboratories, Ltd.	20232	$ 225.00	INV 135670 EPA 1664 - Oil and Grease, 3, 9/15	8004
	North Coast Laboratories, Ltd.	20232	$ 1,125.00	INV 135486 DNSWA Grndwtr Dissolved Metals, 5, 9/6	
	North Coast Laboratories, Ltd.	20232	$ 390.00	INV 135486 DSNWA Grndwtr Minerals, 3, 9/6	
	North Coast Laboratories, Ltd.	20232	$ 260.00	INV 135486 DNSWA Grndwtr Minerals, 2, 9/6	
	North Coast Laboratories, Ltd.	20232	$ 600.00	INV 135486 EPA 8260B, 5, 9/6	
	North Coast Laboratories, Ltd.	20232	$ 100.00	INV 135486 Geotracker Reporting, 1, 9/6	
	North Coast Laboratories, Ltd.	20232	$ 270.00	INV 135454 Chemical Oxygen Demand, 9, 9/8	
	North Coast Laboratories, Ltd.	20232	$ 2,025.00	INV 135454 DNSWA Grndwtr Dissolved Metals, 9, 9/8	
	North Coast Laboratories, Ltd.	20232	$ 936.00	INV 135454 DNSWA Grndwtr Minerals, 9, 9/8	
	North Coast Laboratories, Ltd.	20232	$ 1,080.00	INV 135454 EPA 8260B, 9, 9/8	
	North Coast Laboratories, Ltd.	20232	$ 100.00	INV 135454 Geotracker Reporting, 1, 9/8	
	North Coast Laboratories, Ltd.	20232	$ 200.00	INV 135486 Chemical Oxygen Demand, 5, 9/6	
	North Coast Laboratories, Ltd.	20232	$ 675.00	INV 135670 DNSWA Grndwtr Dissolved Metals, 3, 9/15	
	North Coast Laboratories, Ltd.	20232	$ 100.00	INV 135815 Geotracker Reporting, 1, 9/25	

	North Coast Laboratories, Ltd.	20232	$ 255.00	INV 135670 EPA 8260B, 3, 9/15	
	North Coast Laboratories, Ltd.	20232	$ 100.00	INV 135670 Geotracker Reporting, 1, 9/15	
	North Coast Laboratories, Ltd.	20232	$ 75.00	INV 135670 Nitrate and/or Nitrite, 3, 9/15	
	North Coast Laboratories, Ltd.	20232	$ 75.00	INV 135670 pH, 3, 9/15	
	North Coast Laboratories, Ltd.	20232	$ 75.00	INV 135670 Settleable Solids, 3, 9/15	
	North Coast Laboratories, Ltd.	20232	$ 75.00	INV 135670 Turbidity, 3, 9/15	
	North Coast Laboratories, Ltd.	20232	$ 200.00	INV 135815 Chemical Oxygen Demand, 5, 9/25	
	North Coast Laboratories, Ltd.	20232	$ 1,125.00	INV 135815 DNSWA Grndwtr Dissolved Metals, 5, 9/25	
	North Coast Laboratories, Ltd.	20232	$ 650.00	INV 135815 DNSWA Grndwtr Minerals, 5, 9/25	
	North Coast Laboratories, Ltd.	20232	$ 600.00	INV 135815 EPA 8260B, 5, 9/25	
	North Coast Laboratories, Ltd.	20232	$ 120.00	INV 135670 Chemical Oxygen Demand, 3, 9/15	
10/6/2017	Efficiency Delivery	20280	$ 30.00	INV 437411 Delivery to North Coast Labs, 8/31	8005
10/12/2017	G.H. Outreach	20285	$ 175.00	INV 935688 September 2017 Recycling Services	8006
10/12/2017	Crescent Hay & Feed	20140	$ 9.68	REC 213035 Straw for conex	8007
10/12/2017	Curry Transfer Roto-Rooter	20140	$ 160.18	INV 65846372 KTS PortaPotty September 2017	8008
	Curry Transfer Roto-Rooter	20140	$ 160.18	INV 65846371 GTS PortaPotty September 2017	
10/12/2017	Hi-Tech Security	20236	$ 97.25	INV 17-09491 Repair damage to sensor, office door	8009
10/12/2017	Lawrence & Associates	20231	$ 751.25	INV 24707 PRO 015063.00 August 2017	8010
10/12/2017	Black & Rice LLP	20234	$ 594.50	Statement for September 2017 Legal Fees	8011
10/12/2017	Recology Del Norte	20238	$ 1,709.73	INV 2207 Klamath Beach Rd 09/17 bin pull	8012
	Recology Del Norte	20238	$ 379.94	INV 2206 Old Gasquet Toll Rd 09/17 bin pull	
10/12/2017	The Triplicate	20240	$ 77.50	INV 2396843 Hazardous Waste Event ad 09/16/17	8013
	The Triplicate	20240	$ 72.12	INV 2396843 Hazardous Waste Event ad 09/14/17	
	The Triplicate	20240-063	$ 5.38	INV 2396843 Hazardous Waste Event ad 09/14/17	
	The Triplicate	20240-063	$ 77.50	INV 2396843 Hazardous Waste Event ad 09/12/17	
	The Triplicate	20240	$ 99.00	INV 2396843 Hazardous Waste Event ad 09/09/17	
	The Triplicate	20240	$ 64.50	INV 2396843 Invitation to Bid ad 09/07/17	
10/12/2017	Hambro/Waste Solutions Group	20239	$ 188,679.45	INV 2017-09 Material Management September 2017	8014
10/12/2017	DN County Auditor	20297	$ 27.66	C. Renner Petroleum fuel charges 09/16-30/2017	Interdepartmental
10/12/2017	DN County Auditor	20237	$ 1,976.49	Debit/Credit Mo. Lease September 2017	Interdepartmental
10/16/2017	Clean Harbors Env. Services	20281	$ 28,956.45	INV 1002042177 Cust# DE3042 Branch 6J	8015
10/16/2017	Fleshman, Ronald	20290	$ 387.88	Mileage reimb 09/08-10/15/17	8016
10/16/2017	Butcher, Andrew	20231	$ 750.00	INV 2348 IT Services November 2017	8017
10/16/2017	United States Cellular	20121	$ 91.72	INV 0213980460 10/04-11/03/17 Cell Service	8018
10/16/2017	United Financial Casualty Co.	20152	$ 2,186.76	Policy #04469598-8 12/15/17-12/15/18	8019
10/17/2017	Ward, Tedd	20290	$ 90.63	Mileage 10/16/17 Visit Recology Humboldt Processing Facility	Interdepartmental
10/17/2017	Canon Financial Services, Inc.	20221	$ 53.24	INV 17875616 Printing charges September 2017	8020
	Canon Financial Services, Inc.	20250	$ 142.02	INV 17875616 Contract rental charges Oct. 2017	
10/17/2017	DN County Community Development	20221	$ 3.15	September 2017 Copies	Interdepartmental
10/17/2017	DN County Auditor	20221	$ 0.38	September 2017 Copies	Interdepartmental
10/17/2017	Seymour, Kyra	20110	$ 150.00	Biennial protective footware allowance	8021
10/20/2017	Schmitt, Rita	20110	$ 50.00	Biennial waterproof footware allowance	8022
10/20/2017	Davis, Darren	20110	$ 50.00	Biennial waterproof footware allowance	8023
10/23/2017	Recology Del Norte	20288	$ 256.34	BILL 05192422 900 Tenth St - City Yard	8024
10/23/2017	Recology Del Norte	20283	$ 464.58	BILL 05192414 500 Cooper Ave - County Yard	8025
10/23/2017	Recology Del Norte	20288	$ 819.32	BILL 05192398 1001 Front St - Cultural Center	8026
10/23/2017	DN County Auditor	20297	$ 27.29	C Renner Petroleum fuel charges 10/01-10/15/17	Interdepartmental
10/23/2017	DN County Auditor	20155	$ 599.50	P, L & MM Insurance, 17/18 1st Quarter	Interdepartmental
10/24/2017	Mission Linen Supply	20140	$ 30.86	INV 506001223 Linen service 10/24/17	8027
	Mission Linen Supply	20140	$ 30.86	INV 505906996 Linen service 10/10/17	
10/24/2017	Quill	20224	$ 15.04	INV 1657235 Onyx mesh copy holder	8028
	Quill	20224	$ 8.05	INV 1652685 Qb rubber bands, 1/4X3-1/2, pk	
	Quill	20224	$ 15.36	INV 1652685 2018 scenic wall calendar	
	Quill	20224	$ 9.66	INV 1652685 2018 quill yearly blue wall ca	
	Quill	20224	$ 25.78	INV 1652685 2018 quill quarterly blue wall, w	
	Quill	20224	$ 18.26	INV 1652685 Ppr astro 24# trtl 5C/rm	
	Quill	20224	$ 29.55	INV 1652685 3/4X1000 magic tape, 10 pk	
	Quill	20224	$ 3.97	INV 1652685 G2 gel ink pen refill, Fine pnt Red	
	Quill	20224	$ 38.69	INV 1652685 Brother tze2312Pk 1/2 blk/wh, 2 pk	
	Quill	20224	$ 12.99	INV 1652685 G2 gel ink pen, fine pt Blue, 1 doz	
	Quill	20140	$ 9.64	INV 1652685 Purell naturals hand sntzr 8Oz, 3	
10/26/2017	Crescent Ace Hardware	20239-001	$ 0.31	INV 688919 Ring Key Split 5/8"	8029
	Crescent Ace Hardware	20239-001	$ 2.79	INV 688919 Key Master M4	
	Crescent Ace Hardware	20140	$ 2.57	INV 687162 Key Schlage SC1-ACE250PK	
	Crescent Ace Hardware	20140	$ 5.14	INV 687162 Key Schlage SC1-ACE250PK	
	Crescent Ace Hardware	20180	$ (3.00)	INV 686881 $3 Instant Savings-6093082	
	Crescent Ace Hardware	20180	$ 13.96	INV 686881 Trash Bag Contr55GL 15CT	
	Crescent Ace Hardware	20180	$ 23.64	INV 686881 Elec Galv Wire17GA 1320'	
	Crescent Ace Hardware	20224	$ 21.49	INV 685664 Magnetic Pickup Tool 41", 1	
10/27/2017	DN County IT Department	20230	$ 31.35	INV 21835 Labor, Board Meeting 10/17/17	Interdepartmental
10/30/2017	Quill	20224	$ 13.96	INV 1829701 2018 atagInc paperflower 22X17	8030
	TOTAL		$ 247,609.71		

DNSWMA
GRAND TOTALS
October 2017

	Amount to 422-421 91003	Amount to 422-421 91004	TOTAL AMOUNT
	66.53%	**33.47%**	
DNCTS Cash Total	28,505.55	14,340.61	*42,846.16*
DNCTS Charge Total	122,911.19	61,834.32	*184,745.51*
DNCTS Credit/Debit	25,477.88	12,817.45	*38,295.33*
DNCTS Adjustment	-385.35	385.35	*0.00*
DNCTS Totals	176,509.27	89,377.73	*265,887.00*
Klamath Cash Total		5,470.66	5,470.66
Klamath Charge Total		178.30	178.30
Klamath Adjustment			
Klamath Totals		5,648.96	*5,648.96*
Gasquet Cash Total		1,216.81	1,216.81
Gasquet Charge Total		0.00	*0.00*
Gasquet Adjustment			
Gasquet Totals		1,216.81	*1,216.81*
GRAND TOTALS	***176,509.27***	***96,243.50***	***272,752.77***

2.3

MONTHLY SPLIT SHEET
DNSWMA TRANSFER STATION
MONTH: OCTOBER 2017

Date	Cash	Checks	Cash/Check Total	Visa	Master	Discover	AmExp	Credit Card Total	Charges	Grand Total	66.53% 91003	33.47% 91004	20286	Total	
1	$ 1,647.07	$ 328.60	$ 1,975.67	$ 1,568.93	$ 93.64			$ 1,662.57	$ 1,474.22	$ 5,112.46	$ 1,314.41	$ 661.26	($0.71)	$ 1,974.96	
2	$ 1,230.38	$ 114.45	$ 1,344.83	$ 1,400.92	$ 76.99	$ 90.72	$ 7.50	$ 1,576.13	$ 7,883.40	$ 10,804.36	$ 894.72	$ 450.11	$0.56	$ 1,345.39	
3	$ 1,353.22	$ 115.86	$ 1,469.08	$ 862.00	$ 16.41	$ 20.79		$ 899.20	$ 10,649.25	$ 13,017.53	$ 977.38	$ 491.70	$0.07	$ 1,469.15	
4	$ 1,636.37	$ 91.36	$ 1,727.73	$ 1,196.46	$ 107.53			$ 1,303.99	$ 5,597.93	$ 8,629.65	$ 1,149.46	$ 578.27	($3.99)	$ 1,723.74	
5	$ 1,228.27	$ 29.71	$ 1,257.98	$ 1,048.36	$ 111.46		$ 781.11	$ 1,940.93	$ 6,992.89	$ 10,191.80	$ 836.93	$ 421.05	$0.71	$ 1,258.69	
6	$ 1,338.77	$ 83.25	$ 1,422.02	$ 1,115.36	$ 56.44			$ 1,171.80	$ 8,021.63	$ 10,615.45	$ 946.07	$ 475.95	$3.43	$ 1,425.45	
7	$ 1,469.58	$ 45.25	$ 1,514.83	$ 1,570.88	$ 53.54			$ 1,624.42	$ 1,194.18	$ 4,333.43	$ 1,007.82	$ 507.01	$2.04	$ 1,516.87	
8	$ 1,470.74	$ 211.63	$ 1,682.37	$ 2,162.31	$ 74.25	$ 8.91		$ 2,245.47	$ 1,342.67	$ 5,270.51	$ 1,119.28	$ 563.09	$0.21	$ 1,682.58	
9	$ 1,118.85	$ 148.75	$ 1,267.60	$ 1,142.91	$ 102.54		$ 53.34	$ 1,298.79	$ 9,729.56	$ 12,295.95	$ 843.33	$ 424.27	$0.00	$ 1,267.60	
10	$ 1,456.23	$ 35.92	$ 1,492.15	$ 1,209.63	$ 22.28			$ 1,231.91	$ 8,450.84	$ 11,174.90	$ 992.73	$ 499.42	$0.40	$ 1,492.55	
11	$ 1,089.17	$ 100.99	$ 1,190.16	$ 615.57	$ 53.33			$ 668.90	$ 7,008.40	$ 8,867.46	$ 791.81	$ 398.35	$0.44	$ 1,190.60	
12	$ 1,627.77	$ 128.91	$ 1,756.68	$ 623.27		$ 21.42		$ 644.69	$ 7,432.88	$ 9,834.25	$ 1,168.72	$ 587.96	($0.02)	$ 1,756.66	
13	$ 1,291.27	$ 171.60	$ 1,462.87	$ 472.41	$ 126.23			$ 598.64	$ 6,815.57	$ 8,877.08	$ 973.25	$ 489.62	$2.35	$ 1,465.22	
14	$ 1,097.57	$ 92.22	$ 1,189.79	$ 1,328.77	$ 59.48	$ 14.85		$ 1,403.10	$ 1,934.31	$ 4,527.20	$ 791.57	$ 398.22	$0.05	$ 1,189.84	
15	$ 1,544.72	$ 393.03	$ 1,937.75	$ 1,281.61	$ 65.35			$ 1,346.96	$ 1,037.27	$ 4,321.98	$ 1,289.19	$ 648.56	$0.16	$ 1,937.91	
16	$ 1,508.36	$ 211.61	$ 1,719.97	$ 1,292.36	$ 21.00			$ 1,313.36	$ 9,327.07	$ 12,360.40	$ 1,144.30	$ 575.67	($0.02)	$ 1,719.95	
17	$ 1,326.81	$ 58.78	$ 1,385.59	$ 1,087.85	$ 16.34			$ 1,104.19	$ 8,024.23	$ 10,514.01	$ 921.83	$ 463.76	$0.15	$ 1,385.74	
18	$ 1,462.56	$ 373.49	$ 1,836.05	$ 1,135.81	$ 16.34	$ 26.81		$ 1,178.96	$ 4,715.35	$ 7,730.36	$ 1,221.52	$ 614.53	($0.08)	$ 1,835.97	
19	$ 789.53	$ 55.03	$ 844.56	$ 714.04	$ 53.46			$ 767.50	$ 9,660.18	$ 11,272.24	$ 561.89	$ 282.67	$0.01	$ 844.57	
20	$ 601.92	$ 11.88	$ 613.80	$ 633.44	$ 53.46	$ 16.86		$ 703.76	$ 6,009.97	$ 7,327.53	$ 408.36	$ 205.44	$0.41	$ 614.21	
21	$ 520.25	$ 21.26	$ 541.51	$ 549.29	$ 38.62			$ 587.91	$ 474.97	$ 1,604.39	$ 360.27	$ 181.24	$1.49	$ 543.00	
22	$ 782.87	$ 23.40	$ 806.27	$ 564.65	$ 7.50			$ 572.15	$ 799.02	$ 2,177.44	$ 536.41	$ 269.86	($0.05)	$ 806.22	
23	$ 1,132.62	$ 120.51	$ 1,253.13	$ 1,125.10	$ 135.22			$ 1,260.32	$ 8,630.65	$ 11,144.10	$ 833.71	$ 419.42	($0.15)	$ 1,252.98	
24	$ 896.87	$ 319.13	$ 1,216.00	$ 1,310.01	$ 218.92			$ 1,528.93	$ 9,825.55	$ 12,570.48	$ 809.00	$ 407.00	($0.05)	$ 1,215.95	
25	$ 1,004.94	$ 112.51	$ 1,117.45	$ 1,484.78				$ 1,484.78	$ 5,957.36	$ 8,559.59	$ 743.44	$ 374.01	$0.00	$ 1,117.45	
26	$ 1,169.54	$ 221.27	$ 1,390.81	$ 860.11	$ 500.21	$ 7.50		$ 1,367.82	$ 8,965.60	$ 11,724.23	$ 925.31	$ 465.50	$1.48	$ 1,392.29	
27	$ 1,266.57	$ 99.64	$ 1,366.21	$ 1,260.18	$ 78.71			$ 1,338.89	$ 6,523.73	$ 9,228.83	$ 908.94	$ 457.27	($1.44)	$ 1,364.77	
28	$ 1,666.35	$ 169.94	$ 1,836.29	$ 1,274.02	$ 14.85	$ 43.07		$ 1,331.94	$ 902.82	$ 4,071.05	$ 1,221.68	$ 614.61	($0.10)	$ 1,836.19	
29	$ 1,338.08	$ 64.87	$ 1,402.95	$ 1,345.15	$ 73.39			$ 1,418.54	$ 978.12	$ 3,799.61	$ 933.38	$ 469.57	$1.01	$ 1,403.96	
30	$ 1,473.96	$ 129.36	$ 1,603.32	$ 1,148.03	$ 99.51			$ 1,247.54	$ 9,569.15	$ 12,420.01	$ 1,066.69	$ 536.63	($3.76)	$ 1,599.56	oil paid out $4.80
31	$ 1,072.08	$ 148.66	$ 1,220.74	$ 1,338.56	$ 132.68			$ 1,471.24	$ 8,816.74	$ 11,508.72	$ 812.16	$ 408.58	0.24	$ 1,220.98	
								$ -							
TOTALS	$ 38,613.29	$ 4,232.87	$ 42,846.16	$ 34,722.77	$ 2,479.68	$ 250.93	$ 841.95	$ 38,295.33	$ 184,745.51	$ 265,887.00	$ 28,505.55	$ 14,340.61	$ 4.84	$ 42,851.00	

DAILY TICKET REPORT				
DNSWMA TRANSFER STATION				
MONTH:				
			VOIDED	TICKET
Date	BEGIN	END	TICKETS	COUNT
1	967843	968081		**239**
2	968082	968292		**211**
3	968293	968479		**187**
4	968480	968672	1	**192**
5	968673	968867		**195**
6	968868	969070	1	**202**
7	969071	969269		**199**
8	969270	969501		**232**
9	969502	969703		**202**
10	969704	969893		**190**
11	969894	970029	2	**134**
12	970030	970197	2	**166**
13	970198	970376		**179**
14	970377	970554		**178**
15	970555	970756		**202**
16	970757	970968		**212**
17	970969	971166		**198**
18	971167	971352	2	**184**
19	971353	971476		**124**
20	971477	971604		**128**
21	971605	971689		**85**
22	971690	971790		**101**
23	971791	971985		**195**
24	971986	972154		**169**
25	972155	972325		**171**
26	972326	972509		**184**
27	972510	972676	1	**166**
28	972677	972883		**207**
29	972884	973072		**189**
30	973073	973275		**203**
31	973276	973448		**173**
TOTAL			**9**	**5597**

DNSWMA
KLAMATH TRANSFER STATION - DEPOSITS
October-2017

Date	Cash	Checks	TOTAL Deposit	Over / Short	Sales	TOTAL Sales	Charges	TOTAL Cash + Charge	Tickets
OCTOBER 1ST 2017	676.55	27.16	703.71	-0.44	704.15	703.71		703.71	36
OCTOBER 4TH 2017	355.46	63.63	419.09	0.91	418.18	419.09		419.09	27
OCTOBER 8TH 2017	852.21	45.38	897.59	(0.21)	897.80	897.59		897.59	39
OCTOBER 11TH 2017	472.85	80.94	553.79	(0.08)	553.87	553.79		553.79	29
OCTOBER 15TH 2017	1,047.58	59.32	1,106.90	10.12	1,096.78	1,106.90		1,106.90	41
OCTOBER 18TH 2017	267.81	167.24	435.05	(1.98)	437.03	435.05	157.09	592.14	19
OCTOBER 22ND 2017	408.85	68.56	477.41	(0.04)	477.45	477.41		477.41	28
OCTOBER 25TH 2017	261.87	39.21	301.08	(0.55)	301.63	301.08	21.21	322.29	23
OCTOBER 29TH 2017	503.56	72.48	576.04	(0.50)	576.54	576.04		576.04	32
			0.00			0.00		0.00	
			0.00			0.00		0.00	
TOTAL	$ 4,846.74	$ 623.92	**$ 5,470.66**	$7.23	$ 5,463.43	**$ 5,470.66**	$ 178.30	**$5,648.96**	**274**

	TOTAL SALES (CASH + CHARGE)		
Date	Wednesday	Friday	Sunday
OCTOBER 1ST 2017			703.71
OCTOBER 4TH 2017	419.09		
OCTOBER 8TH 2017			897.59
OCTOBER 11TH 2017	553.79		
OCTOBER 15TH 2017			1,106.90
OCTOBER 18TH 2017	592.14		
OCTOBER 22ND 2017			477.41
OCTOBER 25TH 2017	322.29		
OCTOBER 29TH 2017			576.04
TOTALS	***$1,887.31***	***$0.00***	***$3,761.65***
DAILY AVERAGE	$471.83		$752.33

DNSWMA
GASQUET TRANSFER STATION - DEPOSITS
October-2017

Date	Cash	Checks	TOTAL Deposit	Over / Shor	Sales	TOTAL Sales	Charges	TOTAL Cash + Charge	Tickets
OCTOBER 7TH 2017	281.92	87.58	369.50	$9.03	360.47	369.50		369.50	33
OCTOBER 14T 2017	272.51	63.15	335.66	$26.11	309.55	335.66		335.66	29
OCTOBER 21ST 2017	166.29	24.20	190.49		190.49	190.49		190.49	17
OCTOBER 28TH 2017	196.54	124.62	321.16	$1.62	319.54	321.16		321.16	25
			0.00			0.00		0.00	
			0.00			0.00		0.00	
			0.00			0.00		0.00	
			0.00			0.00		0.00	
			0.00			0.00		0.00	
			0.00			0.00		0.00	
TOTAL	$ 917.26	$ 299.55	**$ 1,216.81**	$36.76	$ 1,180.05	**$ 1,216.81**	$ -	**$1,216.81**	**104**

	L SALES (CASH + CHA	
Date	**Thursday**	**Saturday**
OCTOBER 7TH 2017		369.50
OCTOBER 14TH 2017		335.66
OCTOBER 21ST 2017		190.49
OCTOBER 28TH 2017		321.16
TOTALS	***$0.00***	***$1,216.81***
DAILY AVERAGE	#DIV/0!	$304.20

AUTHORITY REVENUE REPORT November 2017

Source	2016/2017	2017/2018	
Authority	Actual Annual	Budget/Month	Adjusted Annual Budget
Service Fees	$ 1,114,509.12	$ 93,487.21	$ 1,121,846.50

	Actual/Month	Comparison FY15/16		Actual/Month	Over Budget
July	$ 93,395.01	$ 12,556.47	July	**$ 105,951.48**	$ 12,464.27
August	$ 100,284.45	$ 17,739.97	August	**$ 118,024.42**	$ 24,537.21
September	$ 97,849.58	$ 7,042.13	September	**$ 104,891.71**	$ 11,404.50
October	$ 84,217.04	$ 12,026.46	October	**$ 96,243.50**	$ 2,756.29
November	$ 87,939.87	$ -	November		$ -
December	$ 84,419.61	$ -	December		$ -
January	$ 88,068.76	$ -	January		$ -
February	$ 78,021.83	$ -	February		$ -
March	$ 92,473.84	$ -	March		$ -
April	$ 91,704.52	$ -	April		$ -
May	$ 106,885.70	$ -	May		$ -
June	$ 109,248.91	$ -	June		$ -
Total	$ 1,114,509.12	$ 49,365.03	Total	**$ 425,111.11**	$ 51,162.28
		Over last year			Over Budget

2.4

AUTHORITY REVENUE REPORT November 2017

Source **2016/2017**

Franchise Fee Actual Annual

2017/2018

Budget/Month	Budget/Year
$ 23,015.25	$ 276,183.00

	2016/2017 Actual/Month	Comparison FY 16/17		2017/2018 Actual/Month	Over/(Under) Budget
July	**$ 24,594.00**	$ (821.00)	July	**$ 23,773.00**	$ 757.75
August	**$ 22,628.00**	$ 3,609.00	August	**$ 26,237.00**	$ 3,221.75
September	**$ 24,003.00**	$ (1,142.00)	September	**$ 22,861.00**	$ (154.25)
October	**$ 22,699.00**	$ 1,683.00	October	**$ 24,382.00**	$ 1,366.75
November	**$ 21,921.00**	$ -	November		$ -
December	**$ 22,566.00**	$ -	December		$ -
January	**$ 20,591.00**	$ -	January		$ -
February	**$ 22,030.00**	$ -	February		$ -
March	**$ 21,197.00**	$ -	March		$ -
April	**$ 22,923.00**	$ -	April		$ -
May	**$ 23,040.00**	$ -	May		$ -
June	**$ 23,586.00**	$ -	June		$ -
Total	**$ 271,778.00**	$ 3,329.00	Total	**$ 97,253.00**	$ 5,192.00
		Over/(Under) last year			Over/ (Under) Budget

LANDFILL REPAIR PROJECT CHANGE ORDER 1

CONTRACT: **CRESCENT CITY LANDFILL STORM DAMAGE REPAIR PROJECT**

CONTRACTOR: **HEMMINGSEN CONSTRUCTION**
AUTHORITY: **DEL NORTE SOLID WASTE MANAGEMENT AUTHORITY**
SUBJECT: **ADITIONAL REPAIRS FOR FIRE RELATED DAMAGE TO LANDFILL**

NATURE OF CHANGES: This Change Order modifies the agreement by adding repairs and replacement of drainage structures damaged as the result of a fire, as described in the attachment. These repairs total $14,072.12.

The attachment is a breakdown of all labor and equipment utilized in the repair, produced by Dave Yeager of Hemmingsen Construction. The wages are depending on experience and tasks performed, and are industry standard according to the Department of Industrial Relations, State of California.

These changes will be effective as of 14 November 2017.

CONTRACT TIME: Contract Time remains unchanged.

CONTRACT PRICE: This Change Order is an additional $14,072.12 over the original contract price.

This Change Order is hereby approved: DATE: _____

Hemmingsen Construction

BY: _____
Dave Yeager

Del Norte Solid Waste Management Authority

BY: _____
Blake Inscore, Chair

BY: _____
Eli Naffah, Secretary

Approved as to form:

BY: _____
Martha D. Rice, General Counsel

3.1

To: **Del Norte Solid Waste Authority**
Storm Damage Repair

Date: October 25, 2017 **Wednesday**

Force Account Repair of piping damaged by Fire

Equipment Used

Equipment Desc	Equip No.	Hr	Desc	Type	Code	Reg Rate	OT Factor
F-350 2005 P/U	Layton	3.5	TRUCK	T&TT	06-12		0.88
Sml Tilt Trailer	Pipe	3.5	TRAIT	TB-2	08-10		0.65
JD Backhoe 410J	Zeph	3.5	LDRRT	DEER	2508K		0.90

Labor & Materials

Employee List	Craft	Shift	Hrs
Fred Soares	Op. 4 Mn	12:30-4	3.5
Zeph Skeen	Oper 3	12:30-4	3.5
Layton O'Rielley	Laborer 1	12:30-4	3.5
Subcontractor			

Materials			
Piping and Fittings from Budge McHugh Supply			

Pipe billing will be less than invoices due to extra material ordered.

Mobilize some of the piping and all of the Flared End Sections and wyes to job site.
Dig out piping ditch to install new piping and remove burnt piping for disposal.
Salvage anchor bands by cutting off bolts. Anchor bands to be re-set by anchoring them into the remaining concrete blocks.
Completed demo and digout - start laying pipe tomorrow.

Accepted by Contractor: Hemmingsen Contracting Co., Inc.

David Yeager _____

For the DNSWA

_____

INVOICE

BUDGE-McHUGH SUPPLY CO.
125 West Fourth St.
P.O. Box 758
Medford, OR 97501
www.budgemchugh.com

Phone 541-779-6180
Fax 541-772-1787

Page 1/1

Sold To
HEMMINGSEN CONTRACTING CO INC
1841 NORTHCREST DR
PO BOX 215
CRESCENT CITY CA 95531

Ship To
HEMMINGSEN CONTRACTING CO INC
1841 NORTHCREST DR
PO BOX 215
CRESCENT CITY CA 95531

Customer #	Order Date	Our Order #	Reference	Customer P/O #	Ship Via	Slmn
HEMCON0	10/18/2017	171364		LANDFILL	Our Truck	141

Invoice #	Inv Date	Ship Date	Freight Terms	Job Number	Terms
171364	10/23/2017	10/23/17	PREPAID	VERBAL DAVE	NET 30 DAYS

QNTY ORD	QNTY SHIP	QNTY B/O	PRODUCT NUMBER	DESCRIPTION	UOM	LIST PRICE	DISC%	EXTENSION
				QUOTE : 037349				
240	240		1220HQWT	12"x20' WATER TIGHT PIPE BLUE SEAL	Ft	15.3800 9.40/ft	NET	$2256.00
1	1		QTLUBE	1 QUART PVC RT LUBE L95-200 30600	Ea	15.4400	60.00	$6.18
Rec'd 10-27	Credit			40'x12" 40x		$9.40/ft		376.00
				sales tax				28.20
								<$404.20>

Go green -- have your invoices emailed or faxed.

Past due invoices will be charged finance charges.
Terms & Conditions
Please include your invoice number or account number on all checks.

MSDS sheets available upon request.

Merchandise	2,262.18
Freight	0.00
Misc Charge	0.00
Sub Total	2262.18
Taxable	2262.18
Tax (8)	169.66
TOTAL	$2,431.84

<404.20>

$2,027.64

Faxed Copy

Writer CC

INVOICE

BUDGE-McHUGH SUPPLY CO.
125 West Fourth St.
P.O. Box 758
Medford, OR 97501
www.budgemchugh.com

Phone 541-779-6180
Fax 541-772-1787

Page 1/1

Sold To
HEMMINGSEN CONTRACTING CO INC
1841 NORTHCREST DR
PO BOX 215
CRESCENT CITY CA 95531

Ship To
HEMMINGSEN CONTRACTING CO INC
1841 NORTHCREST DR
PO BOX 215
CRESCENT CITY CA 95531

Customer #	Order Date	Our Order #	Reference	Customer P/O #	Ship Via	Slmn
HEMCON0	10/18/2017	171365		LANDFILL	Best Way	141

Invoice #	Inv Date	Ship Date	Freight Terms	Job Number	Terms
171365	10/23/2017	10/23/17	PREPAID	VERBAL DAVE	NET 30 DAYS

QNTY ORD	QNTY SHIP	QNTY B/O	PRODUCT NUMBER	DESCRIPTION	UOM	LIST PRICE	DISC%	EXTENSION
				QUOTE : 037349				
7	7		SP*033407	12 WT WYE 1284WT * Above is a special order & * * Non-Returnable item x:____ *	Ea	340.3600 207.50 ea	NET	$1452.50
7	7		SP*003752	12"-15" FLARED END PIECE 1215NP * Above is a special order & * * Non-Returnable item x:____ *	Ea	294.8900 180 ea	NET	$1260.00
4	4		SP*020818	12" WT COUPLING 1215AA * Above is a special order & * * Non-Returnable item x:____ *	Ea	142.8300 87 ea	NET	$348.00

Go green -- have your invoices emailed or faxed.

Past due invoices will be charged finance charges.
Terms & Conditions
Please include your invoice number or account number on all checks.

MSDS sheets available upon request.

Merchandise	3,060.50
Freight	174.62
Misc Charge	0.00
Sub Total	3235.12
Taxable	3235.12
Tax (8)	242.63
TOTAL	$3,477.75

Faxed Copy

Writer CC

To: **Del Norte Solid Waste Authority**
Storm Damage Repair

Date: October 26, 2017 **Thursday**

FORCE ACCOUNT REPAIR OF PIPING DAMAGED BY FIRE

Equipment Used

Equipment Desc	Equip No.	Hr	Desc	Type	Code	Reg Rate	OT Factor
F-350 2005 P/U	Layton	8	TRUCK	T&TT	06-12		0.88
Sml Tilt Trailer	Pipe	2	TRAIT	TB-2	08-10		0.65
JD Backhoe 410J	Zeph	8	LDRRT	DEER	2508K		0.90
Generator - 6.5 kw	1	6	ELGEN	GEN	003-008		0.69

Labor & Materials

Employee List	Craft	Shift	Hrs
Fred Soares	Op. 4 Mn	8-4	8
Zeph Skeen	Oper 3	8-4	8
Layton O'Rielley	Laborer 1	8-4	8
Travis Goodlin	Laborer 1	8:30-4	7.5
Subcontractor			

Materials				
Crescent Ace Hardware	Anchor bolts/All thread	Inv # 689573	$	141.41
Crescent Ace Hardware	Bolts, nuts, washers for grates	Inv. # 689591	$	65.53

Install lower half of pipe run including wyes and flared end sections.
Rotohammer anchor holes in existing concrete blocks to remount salvaged pipe straps.
Remount flared end section grates.
Backfill pipe and fittings as installed.

Accepted by Contractor: Hemmingsen Contracting Co., Inc.

David Yeager _____

For the DNSWA

_____

CRESCENT ACE HARDWARE #7464
840 E. WASHINGTON BLVD.
CRESCENT CITY, CA 95531

PHONE: (707) 465-5865

CUST NO: 1401
JOB NO: 000
PURCHASE ORDER: LAND FILD TMN
REFERENCE: PO # LAND FILD TMN
TERMS: PAY BY THE 10TH
CLERK: 440
DATE / TIME: 10/26/17 9:08

SOLD TO:
HEMMINGSEN CONSTRUCT
CONSTRUCTION
P.O. BOX 215
CRESCENT CITY CA 95531

SHIP TO:

TERMINAL: 557

TAX: 002 CA STATE TAX 7.50%

INVOICE: 689573

LINE	SHIPPED	ORDERED	UM	SKU	DESCRIPTION	SUGG	UNITS	PRICE/ PER	EXTENSION
1	5	5	EA	52109	ROD THREAD1/2X36STL BLUE		5	5.99 /EA	29.95
2	4	4	EA	FO71792	CUT-OFF 4"		4	1.69 /EA	<6.76>
3	1	1	EA	2101160	BLADE SAWZAL 6"18TPI PK5		1	17.99 /EA	17.99
4	1	1	EA	21357	PUNCH PIN 6X1/4"		1	5.99 /EA	5.99
5	33	33	EA	BO	SCREWS NUTS BOLTS		33	1.19 /EA	39.27 *
6	35	35	EA	BO	SCREWS NUTS BOLTS		35	0.43 /EA	15.05 *
7	35	35	EA	BO	SCREWS NUTS BOLTS		35	0.37 /EA	12.95 *
8	35	35	EA	BO	SCREWS NUTS BOLTS		35	0.37 /EA	12.95 *
									<3.38>
									<5.99>
					Sales tax				<.70>
									<10.07>

TAXABLE 140.91
NON-TAXABLE 0.00

SUBTOTAL 140.91

(FRED SOARES)
** AMOUNT CHARGED TO STORE ACCOUNT ** 151.48
706

SUBTOTAL 140.91

TAX AMOUNT 10.57

TOTAL 151.48

<10.07>

TOT WT: 8.50

x

Received By

$141.41

CRESCENT ACE HARDWARE #7464
840 E. WASHINGTON BLVD.
CRESCENT CITY, CA 95531

PHONE: (707) 465-5865

Cust No	Job No	Purchase Order	Reference	Terms	Clerk	Date	Time
1401		LANDFIELT&N	PO # LANDFIELT&N	PAY BY THE 10TH	612	10/26/17	9:35

Sold To:
HEMMINGSEN CONSTRUCT
CONSTRUCTION
P.O. BOX 215
CRESCENT CITY CA 95531

Ship To:

TERM#565

DOC# 689591
****
* INVOICE *
****

TAX : 002 CA STATE TAX 7.50%

LN#	SHIPPED	ORDERED	UM	SKU	DESCRIPTION	SUGG	UNITS	PRICE/PER	EXTENSION
1	50		EA	BO	SCREWS NUTS BOLTS		50	.16 /EA	8.00 *
2	50		EA	BO	SCREWS NUTS BOLTS		50	.13 /EA	6.50 *
3	50		EA	BO	SCREWS NUTS BOLTS		50	.37 /EA	18.50 *
4	4		EA	13045	SPRYPRIMR ZINC RICH 16OZ		4	6.99 /EA	27.96

082 ** AMOUNT CHARGED TO STORE ACCOUNT ** 65.53

(FRED SOARES)

TAXABLE	60.96
NON-TAXABLE	0.00
SUBTOTAL	60.96
TAX AMOUNT	4.57
TOTAL AMOUNT	65.53

X

Received By

To: **Del Norte Solid Waste Authority**
Storm Damage Repair

Date: October 27, 2017 **Friday**

Force Account Repair of piping damaged by Fire

Equipment Used

Equipment Desc	Equip No.	Hr	Desc	Type	Code	Reg Rate	OT Factor
F-350 2005 P/U	Layton	8	TRUCK	T&TT	06-12		0.88
Sml Tilt Trailer	Pipe	2	TRAIT	TB-2	08-10		0.65
JD Backhoe 410J	Zeph	8	LDRRT	DEER	2508K		0.90
Generator - 6.5 kw	1	4	ELGEN	GEN	003-008		0.69

Labor & Materials

Employee List	Craft	Shift	Hrs	
Fred Soares	Op. 4 Mn	8-2:30	6.5	
Zeph Skeen	Oper 3	8-4	8	
Layton O'Rielley	Laborer 1	8-4	8	
Travis Goodlin	Laborer 1	8:00-4	8	
Materials				
Crescent Ace Hardware	Galvanized Paint		Inv. # 689821	$ 15.03
Budge McHugh	Credit - 2 sticks of 12" pipe		Inv. # 171364	**$ (404.20)**

Complete installation of pipe, flared end sections and wyes.
Clean-up slope behind distrubance.

Return (2) sections - 40 feet of 12" pipe - credit above. Credit shown above.

Backfill pipe and fittings as installed.

Accepted by Contractor: Hemmingsen Contracting Co., Inc.

David Yeager _____

For the DNSWA

_____

CRESCENT ACE HARDWARE #7464
840 E. WASHINGTON BLVD.
CRESCENT CITY, CA 95531

PHONE: (707) 465-5865

CUST NO:	JOB NO:	PURCHASE ORDER:	REFERENCE:	TERMS:	CLERK:	DATE / TIME:
1401	000	LANDFILL TM	PO # LANDFILL TM	PAY BY THE 10TH	738	10/27/17 10:59

TERMINAL: 556

SOLD TO:
HEMMINGSEN CONSTRUCT
CONSTRUCTION
P.O. BOX 215
CRESCENT CITY CA 95531

SHIP TO:

TAX: 002 CA STATE TAX 7.50%

INVOICE:689821

LINE	SHIPPED	ORDERED	UM	SKU	DESCRIPTION	SUGG	UNITS	PRICE/ PER	EXTENSION
1	2	2	EA	1262351	GALVANIZING COMPOUND20O		2	6.99 /EA	13.98

TAXABLE 13.98
NON-TAXABLE 0.00

SUBTOTAL 13.98

(FRED SOARES)
** AMOUNT CHARGED TO STORE ACCOUNT ** 15.03
041

SUBTOTAL 13.98

TAX AMOUNT 1.05

TOTAL 15.03

TOT WT: 3.20

Received By

INVOICE

BUDGE-McHUGH SUPPLY CO.
125 West Fourth St.
P.O. Box 758
Medford, OR 97501
www.budgemchugh.com

Phone 541-779-6180
Fax 541-772-1787

Page 1/1

Sold To
HEMMINGSEN CONTRACTING CO INC
1841 NORTHCREST DR
PO BOX 215
CRESCENT CITY CA 95531

Ship To
HEMMINGSEN CONTRACTING CO INC
1841 NORTHCREST DR
PO BOX 215
CRESCENT CITY CA 95531

Customer #	Order Date	Our Order #	Reference	Customer P/O #	Ship Via	Slsmn
HEMCON0	10/18/2017	171364		LANDFILL	Our Truck	141

Invoice #	Inv Date	Ship Date	Freight Terms	Job Number	Terms
171364	10/23/2017	10/23/17	PREPAID	VERBAL DAVE	NET 30 DAYS

QNTY ORD	QNTY SHIP	QNTY B/O	PRODUCT NUMBER	DESCRIPTION	UOM	LIST PRICE	DISC%	EXTENSION
				QUOTE - 037349				
240	240		1220HQWT	12"x20' WATER TIGHT PIPE BLUE SEAL	Ft	15.3800 9.40/ft	NET	$2256.00
1	1		OTLUBE	1 QUART PVC RT LUBE L95-200 30600	Ea	15.4400	60.00	$6.18
10-27			Credit	40'x12" 40x		$9.40/ft		376.00
				sales tax				28.20
								<$404.20>

Go green -- have your invoices emailed or faxed.

Past due invoices will be charged finance charges.
Terms & Conditions
Please include your invoice number or account number on all checks.

MSDS sheets available upon request.

Merchandise	2,262.18
Freight	0.00
Misc Charge	0.00
Sub Total	2262.18
Taxable	2262.18
Tax (8)	169.66
TOTAL	$2,431.84

Faxed Copy

Writer CC

<404.20>

$2,027.64

PROCESSING AGREEMENT

This Processing Agreement (this "Agreement") is made and entered into as of October 20, 2017, by and between Recology Del Norte, a California corporation ("Contractor"), and Recology Humboldt County, a California corporation ("Processor").

WHEREAS, Contractor and the Del Norte Solid Waste Management Authority ("Authority") are parties to that certain Franchise Agreement dated August 11, 2010 for Solid Waste Collection Services for Crescent City and Del Norte County, California, as amended (the "Franchise Agreement"; capitalized terms used but not defined herein shall have the meanings given to them in the Franchise Agreement);

WHEREAS, Processor owns and operates that certain recyclables processing facility located at 555 Vance Avenue, Samoa, CA (the "Processing Facility");

WHEREAS, Contractor wishes to have Processor process the Recyclable Materials collected by Contractor pursuant to the Franchise Agreement, and Processor wishes to provide such services at the Processing Facility, all on the terms and conditions set forth herein; and

WHEREAS, Section 3.02.F of the Franchise Agreement requires Contractor to either own or operate facilities for the processing of Recyclable Materials, or have in place a Processing Agreement containing certain provisions specified in Section 5.12 of the Franchise Agreement, which Processing Agreement must be approved by Authority's governing board.

NOW, THEREFORE, the parties agree as follows:

1. Term. The term of this Agreement (the "Term") shall commence on the date hereof and shall continue for the duration of the term of the Franchise Agreement. As of the date hereof, the stated term of the Franchise Agreement ends on June 30, 2023.

2. Acceptance. Processor shall accept, process and market all Recyclable Materials collected by Contractor pursuant to the Franchise Agreement and delivered by Contractor to the Processing Facility. Upon acceptance by Processor, Processor shall own such Recyclable Material and shall be entitled to all value related thereto, including but not limited to CRV.

3. Acknowledgments. The parties acknowledge that (1) the Recycling Collection Services to be provided under the Franchise Agreement are inherently dependent on the processing and marketing of the Recyclable Materials collected thereunder, and (2) Authority, Contractor and Processor each benefit from an agreement which specifies where and how Recyclable Materials collected under the Franchise Agreement are to be reliably processed and marketed.

4. Receiving Area. At all times that Recyclable Materials are being collected by Contractor under the Franchise Agreement, Processor shall ensure that sufficient

4.1

space is made available at the Processing Facility for Contractor to unload such materials. The Processing Facility is capable of receiving 2 trucks/hour.

5. Processing and Marketing. Processor shall process, separate, bale, store and ship for marketing the following categories of Recyclable Material from the mixed Recyclables delivered by Contractor hereunder:

   (a) Plastic containers;
   (b) Steel and tin-plated steel cans;
   (c) Aluminum cans;
   (d) Glass containers (all colors and sizes);
   (e) Non-waxed corrugated cardboard and brown paper grocery bags;
   (f) Newspapers, magazines and catalogs;
   (g) Office paper and junk mail.

   Inbound Recyclable Material shall be processed over a sort line (conveyor belt) which uses screens to separate paper and cardboard, with other commodities being separated manually from each other and from contamination.

   Material not included within any of the categories set forth above is considered contamination and shall be disposed. Contamination also includes the following:

   (i) Expanded polystyrene (aka Styrofoam), including block, packaging peanuts, and containers;
   (ii) Cartons including gable top containers for milk, juice and other beverages;
   (iii) Hard rigid plastics (packaging, toys, car seats, automotive plastics);
   (iv) Film plastics, plastic bags, bubble wrap, cellophane, shrink wrap, low density polyethylene film.

   The baled commodities shall be sold to the manufacturers of recycled-content products set forth on Exhibit A, or to other parties as Processor deems appropriate, but subject to the limitation set forth in Section 6.

6. End Users. Without the prior written approval of the Director, neither Contractor nor Processor may send any processed Recyclable Material collected by Contractor under the Franchise Agreement to an end user who could reasonably be expected to use such material for Disposal as Solid Waste, illegal dumping on land, dumping at sea or in waterways, incineration or energy recovery, use as fill or landfill cover material, or for use in road construction.

7. Residue Disposal. Contractor shall be responsible for (1) providing Processor with containers in which Processor may place contaminants (residue) separated by Processor from the Recyclable Material delivered hereunder, and (2) periodically collecting such containers and delivering the contents to a properly permitted facility for landfill disposal, all at no cost to Processor. Processor may waive its right to the foregoing services in its sole discretion.

8. Authority Indemnified. In accordance with, and without limiting the scope of, the indemnification provisions of Article 8 of the Franchise Agreement, Processor and Contractor shall each defend, indemnify and hold harmless City, County and Authority from any damages that may be caused from the Collection, sorting, and processing of Recyclable Materials. The Authority is a designated third-party beneficiary of Section 8 of this Agreement only.

9. Contamination. Processor may, but shall not be required to, accept loads that appear to contain more than 10% contamination by weight or volume, or that contain any Prohibited Waste. Contractor shall use reasonable efforts, including by implementing a load check program, to ensure that no such loads are delivered to Processor hereunder. Processor acknowledges that Authority has undertaken to work with Contractor to reduce contamination in the loads delivered by Contractor hereunder so as to achieve the 10% threshold. So long as Processor is satisfied that Authority is working diligently and in good faith and taking tangible steps to achieve that threshold, (i) Contractor shall prepare and provide to Processor and Authority quarterly reports regarding contamination levels in such loads, based on visual observation of a random sampling of loads or such other method as the parties may agree, and (ii) Processor shall temporarily and on an exceptional basis accept loads containing more than 10% contamination by weight or volume (but in no event any Prohibited Waste). If Processor ceases to be so satisfied, then Processor may provide Authority with written notice of the same together with a description of the reasons therefor. Authority shall have 90 days from its receipt of such notice to take additional tangible steps to further reduce contamination. If at the end of such 90 day period no further reduction in contamination has occurred, or Processor is not so satisfied, then Processor may terminate this Agreement upon 30 days' prior written notice to Authority and Contractor.

10. Compensation. Compensation by Contactor to Processor, or by Processor to Contractor (as the case may be), shall be as mutually agreed by the parties.

11. Reporting. Processor shall provide such information as Contractor may reasonably request in order to provide the reports to Authority contemplated by the Franchise Agreement.

12. Compliance. Each party represents and warrants that it has all necessary licenses, permits and authorizations necessary for it to perform its obligations hereunder, and agrees to maintain the same in effect throughout the Term. Each party shall perform its obligations hereunder in compliance with all applicable laws, regulations, statutes, and ordinances, and standard industry practices in Northern California. Processor shall provide copies of relevant permits to Contractor within 30 days of any written request.

13. Amendment. This Agreement may be amended by mutual agreement of the parties, provided, however, that no amendment that modifies Sections 1-12 of the Agreement, or this Section 13, shall be effective without 30 days' prior written notice to Authority.

14. Miscellaneous. This Agreement shall be governed by and construed in accordance with the laws of the State of California. The terms of this Agreement shall be binding upon and inure to the benefit of the respective successors and assigns of the parties. The parties hereto are independent contractors and any other relationship, including joint venturers or partners, is expressly denied. This Agreement may be executed in counterparts, and facsimile signatures hereto shall be valid. The provisions hereof shall be severable.

[Remainder of this page intentionally left blank]

IN WITNESS WHEREOF, the duly authorized representatives of the parties have executed and delivered this Processing Agreement as of the date first written above.

CONTRACTOR	PROCESSOR
Recology Del Norte	Recology Humboldt County
By:	By:
Name: Jeremy Herber	Name: LINDA WILSO
Its: General Manager	Its: GENERAL MANAGER

Del Norte Solid Waste Management Authority

1700 State Street, Crescent City, CA 95531
Phone (707) 465-1100 Fax (707) 465-1300
www.recycledelnorte.ca.gov

The Authority's mission is the management of Del Norte County solid waste and recyclable material in an environmentally sound, cost effective, efficient and safe manner while ensuring 100% regulatory compliance with law.

Staff Report

Date: **09 November 2017**
To: **Commissioners of the Del Norte Solid Waste Management Authority**
From: **Tedd Ward, M.S. –Director**
Del Norte Solid Waste Management Authority
Attachments: **Excerpts of the Agreement proposed by American Restore**
File Numbers: **200601 – Transfer Station Floor Repair**

Topic: **Transfer Station Floor and Ramp Repair**

Summary / Recommendation: That the Board accept the agreement proposed by American Restore and authorize necessary signatures to have American Restore complete the scope of services for an amount not to exceed $165,060.03.

Background: Staff released an Invitation to Bid and published required public notices for this project. No bids were received by the deadline of 01 November 2017. On 06 November 2017, however, American Restore submitted a responsive proposal that would have been an acceptable bid had it been received before the bid deadline. As staff did not inform American Restore that no other bids were received, and no other qualified company submitted a comparable proposal, staff recommend that the Authority Board approve signatures on the contract documents so that American Restore

Analysis: The bid package included the plans, specifications and bid requirements. By accepting American Restore's proposal, this floor and ramp repair project can be completed this winter.

Alternatives: The Board could direct staff to initiate another invitation to bid process for this repair. This would delay the repair, and would not likely reduce costs significantly.

SECTION 00 42 00
BID PROPOSAL

For

Del Norte County Waste Transfer Station Floor and Ramp Repair

TO: Kyra Seymour, Facilities and Programs Coordinator
Del Norte Solid Waste Management Authority
1700 State Street
Crescent City, California 95531

Gentlemen:

Having carefully examined the Notice to Contractors, Instruction to Bidders, General Conditions, Supplemental Conditions, Specifications, Plans and form of the Construction Agreement for the **Del Norte County Waste Transfer Area Floor and Ramp Repair,** and having examined the site of the work and conditions affecting it, the undersigned proposes to execute the complete work in full accordance with the plans and specifications for the sum quoted below.

BIDDER'S DECLARATION AND UNDERSTANDING:

In submitting this proposal, the undersigned understands and agrees that the Del Norte Solid Waste Management Authority Board of Directors, Crescent City, California, shall and does reserve the right to reject any and all proposals, to accept other than the lowest proposal, and to waive any informality in any proposal.

The undersigned also understands and agrees that said Board reserves the right to accept or reject his or her proposal at any time within 90 days following the date the Board executes the contract with the lowest responsible bidder. The undersigned further understands and agrees that this proposal shall be valid and effective until the expiration of said period and that the certified or cashier's check or bidder's bond accompanying this proposal shall be valid and effective for a period of 90 days following the date the Board executes the contract with the lowest responsible bidder.

The undersigned has carefully examined the sites where the work is to be done, and in addition has carefully examined and is thoroughly familiar with said Drawings and Specifications, and is familiar with local conditions affecting the cost of the construction herein bid upon, and further understands that the County will not be responsible for any errors or omissions on the part of the undersigned in making this proposal.

In submitting this Bid, Bidder represents that:

(a) Bidder has examined copies of all the Bidding Documents and the following Addenda (receipt of all which is hereby acknowledged):

Date	Number
N/A	N/A

(b) Bidder has familiarized itself with the nature and extent of the Contract Documents, Work, site, locality, availability of labor, and all local conditions, Laws and Regulations that in any manner may affect cost, progress, performance or furnishing of the Work, and has thoroughly examined the plans and specifications.

(c) Bidder has reviewed and checked all information and data shown or indicated on the Contract Documents. No additional information or data will be required by Bidder in order to perform and furnish the Work at the contract Price, within the contract Time, and in accordance with the other terms and conditions of the Contract documents, including specifically the provisions of the General Conditions.

(d) Bidder has correlated the results of all such observations with the terms and conditions of the Contract Documents.

(e) Bidder has given Owner written notice of all conflicts, errors, or discrepancies that it has discovered in the Contract Documents and the written resolution thereof by Owner is acceptable to Bidder.

EXECUTION OF CONTRACT AND NOTICE TO PROCEED:

The successful bidder shall execute the contract in accordance with the proposal as accepted, within 10 working days of the date of mailing the Notice of Award to him or her at his or her address as given below and secure workmen's compensation and any other required insurance and bonds within said time. If the bidder fails to do so, the certified or cashier's check or surety bond and the money payable thereon accompanying the bid shall become the property of, and be retained by, the Del Norte Solid Waste Management Authority as liquidated damages for such failure, provided that if said undersigned shall execute the contract, secure workmen's compensation, and any other required insurance and bonds, his or her check or bid bond shall be returned to him or her within 10 days thereafter.

The undersigned agrees, if awarded the contract for the work included in the Proposal as accepted, to commence work within 10 calendar days after the receipt of written Notice to Proceed or, if no such written Notice to Proceed is issued, within 10 calendar days from the date of execution of the Construction Agreement.

TIME FOR COMPLETION:

The successful bidder shall complete said work within 45 calendar days from the date of commencement work as defined in the above paragraph "Notice to Proceed". Contractor shall coordinate schedules such that a single weekend (including half of Friday) is selected and mutually agreed with the Del Norte Solid Waste Management Authority for the work. Once work on the tipping floor and/or scales ramp begins, and anticipated as starting at noon on a Friday, the work on the floor must be completed prior to the following Monday. Options for the preferred construction timeframe must be coordinated with the Del Norte Solid Waste Management Authority at least 2 weeks prior to the indicated date.

LIQUIDATED DAMAGES:

The undersigned further agrees that there may be deducted from this contract price the sum of **$500.00 per calendar day** for each work day beyond the original contract completion time, and **$5,000** for each day past the 3-day limit for work on the tipping floor, excepting any extension obtained for cause.

BID BOND:

The certified or cashier's check, or bidder's bond accompanying this proposal is equal to 10 percent or more of the total sum or sums bid under the several bid proposals.
Enclosed find (check one):

(X) Bidder's Bond
( ) Certified Check
( ) Cashier's Check No._____in the amount of for 10% of the bid amount

BID FORM

The undersigned agrees to perform all work within the time provided, assuming the obligation for the liquidated damages herein before specified, for the construction of the **Del Norte County Waste Transfer Station Floor and Ramp Repair,** as indicated in the Drawings and Specifications, for the lump sum price of:

Base Bid:

$ 165,030.03 DOLLARS
(Figures)

$ One Hundred Sixty Five Thousand, Thirty Dollars and Three Cents
(Words)

SIGNATURE:

The names of all persons interested in the foregoing proposal as principals are as follows:

James L. Andrews

Benjamin Ball

Sean D. Turner

The Contractor's license number of the undersigned is: 976449

License Expires: 09/30/2018

I declare under penalty of perjury under the laws of the State of California that the foregoing is true and correct.

Company Name: American Restore, Inc.

Business Address: 15552 Commerce Lane Huntington Beach CA, 92649

Mailing Address: 15552 Commerce Lane Huntington Beach CA, 92649

Telephone No.: (714) 893-9080

Signature of Bidder:

Date: November 3rd, 20 17

No bid is valid unless signed by the person making the bid. If the party is an individual the same shall be signed by the individual; if the party is a partnership the name of the partnership shall be given and signed by one of the partners; if the same is a corporation the proposal bid must be signed for the corporation by its properly authorized officer or officers.

****

SUBCONTRACTOR LIST CONTRACTOR NAME:

Del Norte County Waste Transfer Area Floor Repair

The following listed subcontractors are proposed to perform the categories of work hereinafter referred to. All work not covered in the following list will be performed directly by the General Contractor. (Note: This list shall contain the name, address, and telephone number of each subcontractor and an enumeration of work to be performed by each in excess of one-half (1/2) of one percent (1%) of General Contractor's total bid.)

WORK TO BE PERFORMED	NAME OF SUB-CONTRACTOR	MAILING ADDRESS/PHONE NUM./CONTRACTOR LICENSE #
Finished Concrete	California Hi-Tech Floors, Inc.	138 2nd Ave, Upland, CA 91786 CL # 836285

NONCOLLUSION AFFIDAVIT

TO BE EXECUTED BY BIDDER AND SUBMITTED
WITH BID

Benjamin Ball being first duly sworn, deposes and says that he or she is Secretary of American Restore, Inc. the party making the foregoing bid that the bid is not made in the interest of, or on behalf of, any undisclosed person, partnership, company, association, organization, or corporation; that the bid is genuine and not collusive or sham; that the bidder has not directly or indirectly induced or solicited any other bidder to put in a false or sham bid, and has not directly or indirectly colluded, conspired, connived, or agreed with any bidder or anyone else to put in a sham bid, or that anyone shall refrain from bidding; that the bidder has not in any manner, directly or indirectly, sought by agreement, communication, or conference with anyone to fix the bid price of the bidder or any other bidder, or to fix any overhead, profit, or cost element of the bid price or of that of any other bidder, or to secure any advantage against the public body awarding the contract of anyone interested in the proposed contract; that all statements contained in the bid are true; and further, that the bidder has not, directly or indirectly, submitted his or her bid price or any breakdown thereof, or the contracts thereof, or divulged information or data relative thereto, or paid, and will not pay, any fee to any corporation, partnership, company association, organization, bid depository, or to any member or agent thereof to effectuate a collusive or sham bid.

By: BENJAMIN BALL

The names of all persons interested in the foregoing proposal as principals are as follows:

James L. Andrews

Sean D. Turner

Benjamin Ball

The Contractor's license number of the undersigned is 976449 License Expires: 09/30/2018

I declare under penalty of perjury under the laws of the State of California that the foregoing is true and correct.

Company Name: American Restore, Inc.

Business Address: 15552 Commerce Lane Huntington Beach CA, 92649

Mailing Address: 15552 Commerce Lane Huntington Beach CA, 92649

Telephone No.: (714) 893-9080

Signature of Bidder: ____

Date: Nov. 03, 20 17

No bid is valid unless signed by the person making the bid. If the party is an individual the same shall be signed by the individual; if the party is a partnership the name of the partnership shall be given and signed by one of the partners; if the same is a corporation the proposal bid must be signed for the corporation by its properly authorized officer or officers.

GREGORY JOHN BUYSMAN
Notary Public - California
Orange County
Commission # 2182313
My Comm. Expires Feb 5, 2021

Place Notary Seal Above

Subscribed and sworn to (or affirmed) before me

This 3rd (Date) day of November (Month), 2017 (Year) by

(1) Benjamin Ball
Name of Signer(s)

(2) ____
Name of Signer(s)

Signature of Notary Public

STANDARD GENERAL NOTES

1. THE CONSTRUCTION AND INSTALLATION OF IMPROVEMENTS SHALL CONFORM TO THESE PLANS AND STANDARD SPECIFICATIONS FOR PUBLIC WORKS CONSTRUCTION 2015 (CURRENT EDITION).
2. ANY CHANGES TO THESE PLANS MUST RECEIVE PRIOR APPROVAL FROM THE CLIENT AND LAWRENCE & ASSOCIATES.
3. THE CONTRACTOR AGREES THAT, IN ACCORDANCE WITH GENERALLY ACCEPTED CONSTRUCTION PRACTICES, THE CONTRACTOR WILL BE REQUIRED TO ASSUME SOLE AND COMPLETE RESPONSIBILITY FOR JOB SITE CONDITIONS DURING THE COURSE OF CONSTRUCTION OF THE PROJECT INCLUDING SAFETY OF ALL PERSONS AND PROPERTY. THIS REQUIREMENT SHALL BE MADE TO APPLY CONTINUOUSLY AND NOT BE LIMITED TO NORMAL WORKING HOURS. THE CONTRACTOR FURTHER AGREES TO DEFEND, INDEMNIFY AND HOLD OWNER AND ENGINEER HARMLESS FROM ANY AND ALL LIABILITY, REAL OR ALLEGED, IN CONNECTION WITH THE PERFORMANCE OF WORK ON THE PROJECT, EXCEPTING LIABILITY ARISING FROM THE SOLE NEGLIGENCE OF THE OWNER OR ENGINEER.
4. CONTRACTOR'S CONSTRUCTION PRACTICES SHALL CONFORM TO THE APPLICABLE CONSTRUCTION SAFETY ORDERS OF THE DIVISION OF INDUSTRIAL SAFETY OF THE STATE OF CALIFORNIA. CONTRACTOR SHALL ALWAYS COMPLY WITH OSHA REQUIREMENTS.
5. THE CONTRACTOR SHALL POST EMERGENCY TELEPHONE NUMBERS FOR POLICE, FIRE, AMBULANCE, AND THOSE AGENCIES RESPONSIBLE FOR MAINTENANCE OF UTILITIES IN THE VICINITY OF THE JOB SITE.
6. SHOULD IT APPEAR THAT THE WORK TO BE DONE, OR ANY MATTER RELATIVE THERETO, IS NOT SUFFICIENTLY DETAILED OR EXPLAINED WITHIN THESE PLANS, THE CONTRACTOR SHALL CONTACT LAWRENCE & ASSOCIATES AT (530) 275-4800 FOR FURTHER EXPLANATION, AS MAY BE NECESSARY.
7. UNLESS OTHERWISE NOTED, THE WORD "INSTALL" SHALL INCLUDE THE PURCHASE, DELIVERY, PLACEMENT, AND CONNECTION OF ITEMS DESCRIBED ON THESE PLANS AND ALL APPURTENANCES REQUIRED FOR A COMPLETE INSTALLATION.
8. THE CONTRACTOR SHALL MAINTAIN A SET OF RECORD DRAWINGS DURING THE CONSTRUCTION OF THIS PROJECT. THE DRAWINGS SHALL SHOW THE LOCATIONS, LENGTHS, AND DEPTHS OF ALL MATERIALS, EQUIPMENT AND WORK PERFORMED ON THIS PROJECT. SPECIFIC ATTENTION SHOULD BE GIVEN TO ACCURATE LOCATION OF BURIED PIPING AND UTILITIES. UPON COMPLETION OF THE PROJECT, THE CONTRACTOR SHALL USE THE RECORD DRAWING TO DEVELOP A CLEAN, THOROUGH, AS-BUILT PLAN. EITHER AN ELECTRONIC COPY IN AUTOCAD FORMAT OR TWO PAPER COPIES SHALL BE PROVIDED TO THE OWNER.
9. THE GENERAL CONTRACTOR SHALL BE RESPONSIBLE FOR COORDINATING ALL SUBCONTRACTORS AND INSPECTION OF THEIR WORK. THE GENERAL CONTRACTOR WILL BE HELD RESPONSIBLE AND FINANCIALLY ACCOUNTABLE FOR DEFICIENCIES IN SUBCONTRACTORS WORK.
10. CONTRACTOR MUST NOTIFY OWNER AND ENGINEER AT LEAST 48 HOURS PRIOR TO MOBILIZATION.

OWNER: TEDD WARD (707) 954-0953
ENGINEER: DAVID BROWN (530) 275-4800

MATERIALS AND WORKMANSHIP

1. MATERIALS AND EQUIPMENT USED WITHOUT APPROVAL BY THE OWNER MAY BE REJECTED BY THE OWNER WHETHER INSTALLED OR NOT.
2. ALL MATERIALS SHALL BE INSTALLED IN ACCORDANCE WITH THE MANUFACTURER'S INSTRUCTIONS AND THESE DOCUMENTS. ANY DISCREPANCIES OR CONFLICTS BETWEEN THESE DOCUMENTS AND MANUFACTURER'S RECOMMENDATIONS OR APPLICABLE CODES AND REGULATIONS SHALL BE BROUGHT TO THE OWNER'S ATTENTION AND SHALL BE RESOLVED BY THE DESIGN ENGINEER PRIOR TO CONSTRUCTION.
3. IF CONFLICT IS PRESENT BETWEEN THESE PLANS AND APPLICABLE CODES AND REGULATIONS, OR MANUFACTURER'S RECOMMENDATIONS, THE MOST STRINGENT OR RESTRICTIVE METHOD SHALL PREVAIL.

SITE SAFETY

1. THE CONTRACTOR SHALL MAINTAIN A CURRENT COPY OF THEIR GENERAL COMPANY SAFETY PLAN EITHER ON SITE OR WITHIN 1/2 HOUR ROUND-TRIP TRAVEL TIME OF THE SITE. A SITE-SPECIFIC SITE-SAFETY AND HEALTH PLAN SHALL BE KEPT ON SITE ANYTIME WORK IS CONDUCTED WITH HAZARDOUS MATERIALS. THE PLAN SHALL INCLUDE ALL POTENTIAL HAZARDS AND METHODS. FOR MITIGATING THE HAZARDS. THE PLAN SHALL INCLUDE DIRECTIONS AND A MAP SHOWING THE WAY TO THE NEAREST HOSPITAL, A LIST OF EMERGENCY PHONE NUMBERS, INCLUDING EMERGENCY SERVICES, THE OWNER, AND THE RESPONSIBLE CONTRACTOR'S BUSINESS AND CELL PHONE NUMBERS.

PERMITS

1. NO PERMITS REQUIRED.

SCHEDULE

1. THE TRANSFER STATION WILL NOT BE OPERATIONAL WHILE WORK IS COMPLETED.
2. CONTRACTOR SHALL FINISH ENTIRE PROJECT IN ONE MOBILIZATION OVER A MAXIMUM OF 72 HOURS.
3. THE WORK SHALL BEGIN ON A FRIDAY AFTERNOON AND BE COMPLETED PRIOR TO MONDAY.

NO.	DATE	REVISIONS	BY	CHK

PROJECT NO 015063.00	PROJECT ID
DRAWN BY J. BEERS	SCALE N.T.S.
ENGINEER D. BROWN	DATE
CHECKED BY C. COLES	DATE

ORIGINAL SCALE IN INCHES 0 1 2

LAWRENCE & ASSOCIATES
ENGINEERS & GEOLOGISTS

FLOOR REPAIR

DEL NORTE COUNTY
TRANSFER STATION

GENERAL NOTES

DRAWING C2.0
SHEET 2 OF 6
DATE 10/3/2017

J:\015063.00_del norte tsf\floor_repair_revised JEB 10/3/2017

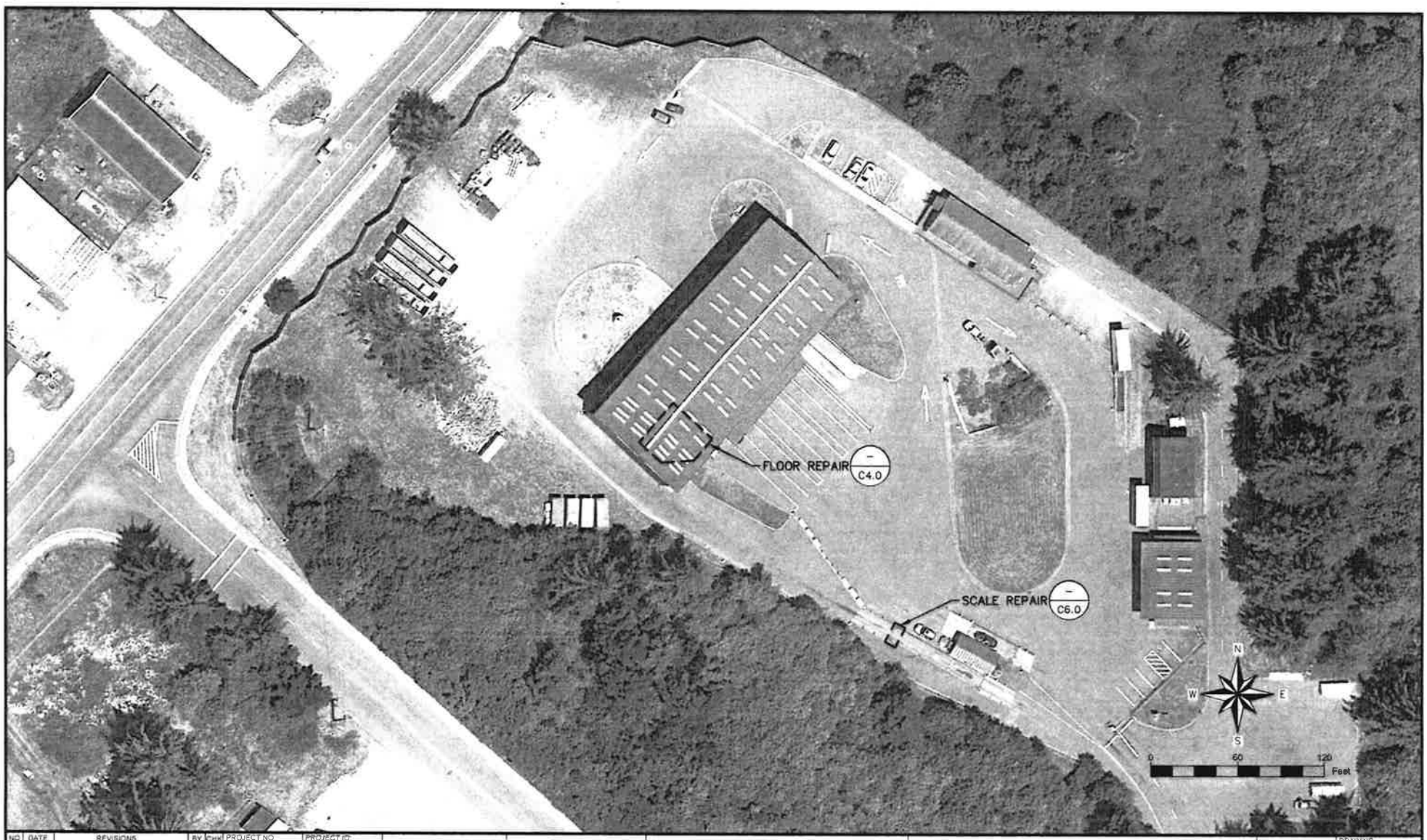

NO	DATE	REVISIONS	BY	CHK

PROJECT NO: 015063.00	PROJECT ID:
DRAWN BY: J. BEERS	SCALE: 1" = 30'
ENGINEER: D. BROWN	DATE:
CHECKED BY: C. COLES	DATE:

ORIGINAL SCALE IN INCHES
0 1 2

LAWRENCE & ASSOCIATES
ENGINEERS & GEOLOGISTS

FLOOR REPAIR

DEL NORTE COUNTY
TRANSFER STATION

SITE MAP

DRAWING: C3.0
SHEET: 3 OF 6
DATE: 10/3/2017

p:\015063.00_del norte landfill\dwg_sp.dwg JRB 10/3/2017

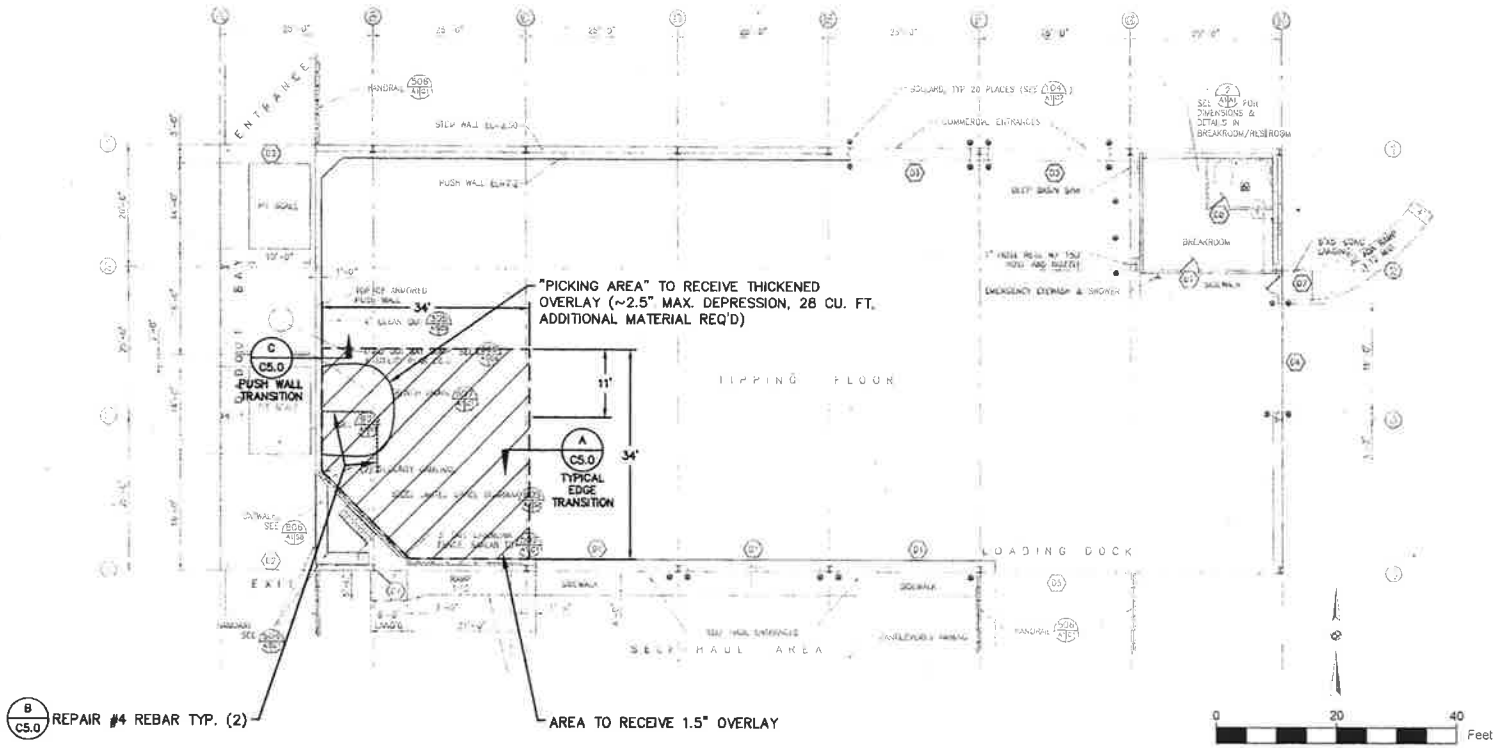

LEGEND

AREA TO BE COVERED WITH 1.5" HIGH STRENGTH CEMENTITIOUS METALIC TOPPING

1,050 S.F. — AREA OF REPAIR SQ. FT.

BACKGROUND IMAGE FROM WINZLER & KELLY CONSULTING ENGINEERS 1/7/04

NO	DATE	REVISIONS	BY	CHK

PROJECT NO. 015063.00	PROJECT ID
DRAWN BY J. BEERS	SCALE 1" = 10'
ENGINEER D. BROWN	DATE
CHECKED BY C. COLES	DATE

ORIGINAL SCALE IN INCHES 0 1 2

LAWRENCE & ASSOCIATES ENGINEERS & GEOLOGISTS

FLOOR REPAIR

DEL NORTE COUNTY TRANSFER STATION

FLOOR REPAIR PLAN

DRAWING C4.0

SHEET 4 OF 6

DATE 10/3/2017

J:\015063.00_del norte landfill\floor_plan.dwg JRB 10/3/2017

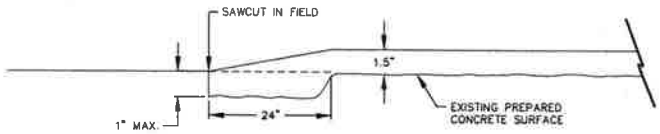

A / C3.0 TYPICAL EDGE TRANSITION

NTS

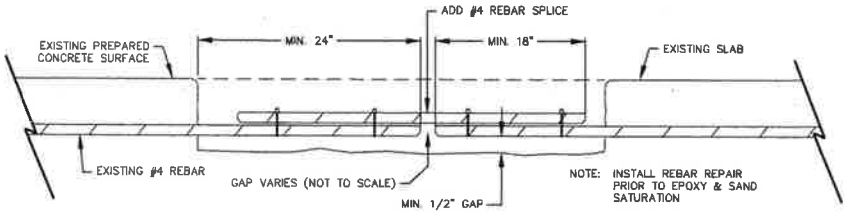

B / C3.0 REPAIR OF DAMAGED REBAR

NTS

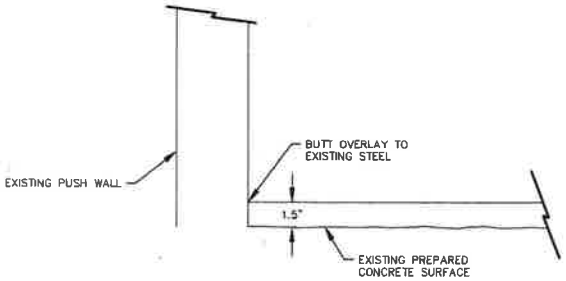

C / C3.0 PUSH WALL TRANSITION

NTS

NO	DATE	REVISIONS	BY	CHK

PROJECT NO 015063.00	PROJECT ID
DRAWN BY J. BEERS	SCALE N.T.S.
ENGINEER D. BROWN	DATE
CHECKED BY C. COLES	DATE

ORIGINAL SCALE IN INCHES 0 1 2

LAWRENCE & ASSOCIATES
ENGINEERS & GEOLOGISTS

FLOOR REPAIR

DEL NORTE COUNTY TRANSFER STATION

DETAILS

DRAWING C5.0

SHEET 5 OF 6

DATE 10/3/2017

P:\015063.00_del norte landfill\floor_details.dwg JRB. 10/3/2017

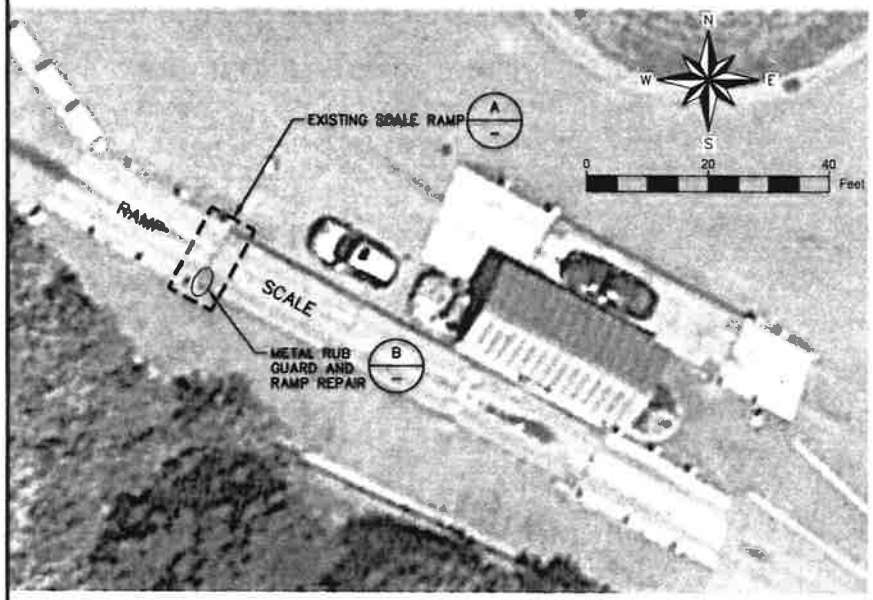

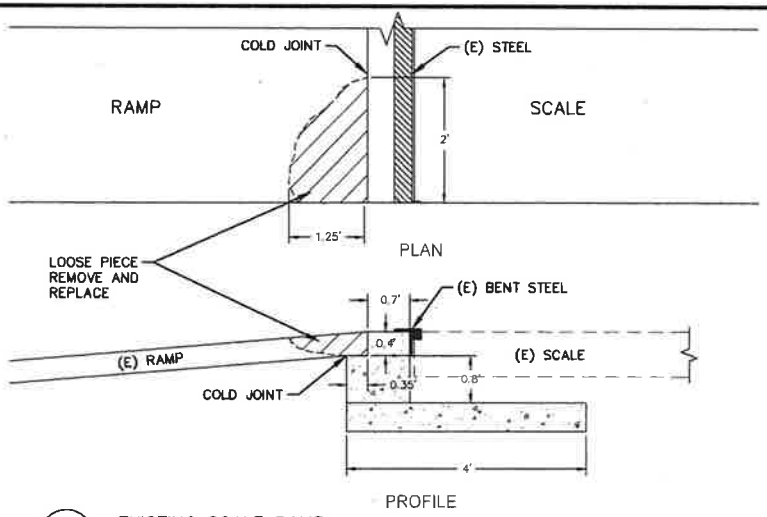

A — EXISTING SCALE RAMP

SCALE: 1" = 1'

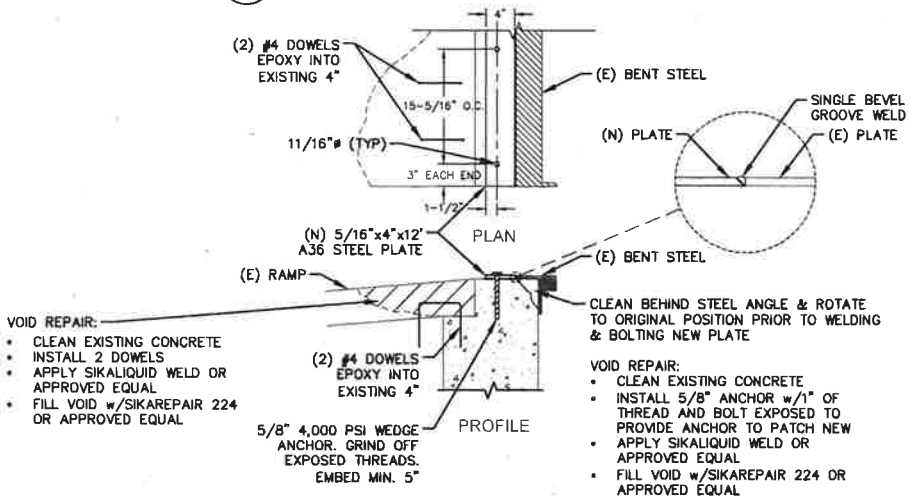

B — METAL RUB GUARD AND RAMP REPAIR

NOT TO SCALE

NO.	DATE	REVISIONS	BY	CHK

PROJECT NO: 015063.00	PROJECT ID
DRAWN BY: J. BEERS	SCALE: AS SHOWN
ENGINEER: D. BROWN	DATE
CHECKED BY: C. COLES	DATE

ORIGINAL SCALE IN INCHES 0 1 2

LAWRENCE & ASSOCIATES
ENGINEERS & GEOLOGISTS

FLOOR REPAIR

DEL NORTE COUNTY TRANSFER STATION

RAMP REPAIR

DRAWING: C6.0

SHEET: 6 OF 6

DATE: 10/3/2017

p:\015063.00_del norte tsf\rmp_repair.dwg JEB 10/3/2017

Tedd Ward

From: Chris Howard <choward@co.del-norte.ca.us>
Sent: Wednesday, October 25, 2017 9:14 AM
To: Tedd Ward; Blake Inscore
Cc: Gerry Hemmingsen; Jay Sarina; Kylie Heriford
Subject: RCRC Environmental Services JPA

Good morning Tedd. At yesterdays BOS meeting, Gerry Hemmingsen proposed that we appoint you as Director of DNSWMA to RCRC's Environmental Services Joint Points Authority as the representative for Del Norte. The County all ready belongs to RCRC and there would be no additional membership dues that I am aware of. Gerry feels that this would be a particularly valuable JPA meeting for you to attend and help stay abreast of solid waste matters affecting Del Norte.

I am not sure how best to let this progress, however I assume, that DNSWMA Board would likely first have to allow you to participate. I will be taking secondary steps to place this item on the Boards agenda for November 14th approval to make you the appointee from Del Norte County.

Your thoughts on this matter would be appreciated.

Chris

6.1